CrustBuster
SPEED KING INC.

COTTON MODULE BUILDER

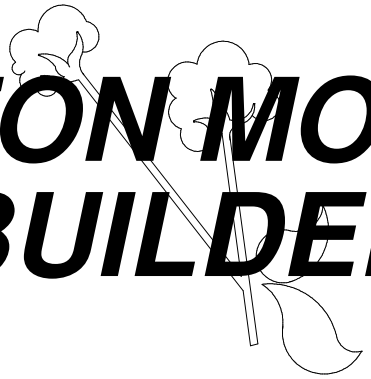

OWNER'S MANUAL

03748100-03-09

Table of Contents

Warranty . . . . . Inside cover
Identification 1
Safety 1-2
Specifications 3
Operation & Set-up Procedures 4-7
Module Builder Guidelines 8-10
Storage 10
Lubrication and Maintenance 11-13
Management Guidelines 13-15
Bridge Adjustment - Chain Drive 16
Chainless 16
Trouble Shooting - General 17-18
Specific 19-20
Repair Parts:
Front End 21
Cab 22
Handrail 22
Sunroof 22
Directional Valve & Hoses 23
Selector Valve & Hoses 24
Cross Port Relief Valve & Hoses 24
Flow Control Valve 25
PTO Pump 25
Oil Reservoir - Manual Tamp 26
Oil Reservoir - Auto Tamp 27
Bridge Assembly - Chain Drive 28-29
Bridge Assembly - Chainless 30-31
Bridge Front & Rear Drive 32-33
Hydraulic Pipes - Chain Drive 34-35
Hydraulic Pipes - Chainless 36-37
Axle 38
Tamper 39
Gate 40
Cylinders 41
Lights 42

Warranty

WARRANTY: In addition to the implied warranties of fitness and of merchantability, CrustBuster/Speed King warrants new products sold by it to be free from defects in workmanship and material for a period of 12 months, from the date of delivery to the first user customer. Warranty on purchased parts (cylinders, chain sprockets, and motors) will be the same as that offered by the appropriate manufacturer of these parts.

EXCLUSIONS: No warranty of any kind is made by CrustBuster/Speed King with regard to new products which have been subject to operation in excess of recommended capacities, misuse, abuse, negligence, or accident, or have been altered or repaired in any manner not authorized by CrustBuster/Speed King. CrustBuster/Speed King is constantly striving to improve its products. Changes in design and improvement will be made whenever CrustBuster/Speed King believes the efficiency of its products will be improved thereby, but without incurring any obligation to incorporate such improvements in any products which have been shipped or are in service. No obligation exists for compensation of unauthorized repairs or modifications without prior approval. And in no event will CrustBuster/Speed King be liable for consequential damages, such as but not limited to: downtime, delays, etc.

WARRANTY REGISTRATION: This warranty is not valid unless registered with CrustBuster/Speed King within 10 days from the date of purchase. It is the sole responsibility of the selling retail dealer to fill out the registration forms and see that they are properly filed with CrustBuster/Speed King.

WARRANTY PROCEDURE: Should any part fail to conform with this warranty, CrustBuster/Speed King will repair or replace the part or parts which do not conform. If a part is defective, take it to your authorized CrustBuster Farm Equipment Dealer immediately, along with your warranty registration, and complete the proper forms requesting a warranty adjustment. Our representative will pick up the part to be returned to the factory for examination. If the customer (first user) requests that a new part be substituted for the old part, a new part will be charged to the dealer who will in turn charge the customer. If the part is found by us to be defective, a credit for the part will be given to the dealer to be passed on to the customer. If the dealer or customer wishes to repair the part, this will be done only if authorized by CrustBuster/Speed King. This warranty procedure is in addition to all remedies authorized by law.

CRUSTBUSTER/SPEED KING, INC.
Box 1438
Dodge City, KS 67801

Identification

Record your model and serial number in the space provided below. Your dealer needs this information to give you prompt, efficient service when you order parts.

DATE PURCHASED _____

MODEL NO. _____ SERIAL NO. _____

Warnings!!!

Read this manual carefully. It will instruct you on how to operate and service your machine safely and correctly. Failure to do so could result in personal injury and /or equipment damage.

1. **DO NOT** unlatch tamping cylinder unless tamper is in lowered position.
2. **DO NOT** operate back door before checking for proper clearance for operation and clearing the area of people.
3. **DO NOT** operate this module builder without familiarizing yourself with the operator's manual.
4. **DO NOT** operate engine RPM over 1300.
5. **DO NOT** move module builder without lowering tamping cylinder.



Safety Precautions



1. Operator should read and understand operator's manual before operating module builder.
2. Do not exceed tractor RPM of 1300.
3. No smoking while building, tamping, or handling modules.
4. Never crawl under the builder for any reason.
5. Do not build modules near, or under high voltage lines.
6. Lower tamper cylinder to transport, or when near power lines or other overhead obstructions.
7. Do not unlock the tamper cylinder unless tamper foot is in the lowered position. Serious damage to cylinder and fittings, and personnel could occur.
8. Move tamper to front of module builder before raising machine off module.
9. Keep hands away from the bridge chain area.
10. Stay out of the container area while bridge or tamper is in operation. Stay out of container area while harvesters are dumping.
11. Install a stop on the hydraulic control lever quadrant to prevent the draw bar from lifting excessively.
12. Use caution in opening rear door. Be certain no one is in the way.
13. Make sure module builder is securely attached to the draw bar and lift arms. We recommend proper size bolts with self-locking nuts.
14. Disengage pump when not in operation.
15. Avoid ditches, tight turns, backing, and other similar potential hazards.
16. Operate at a slow to moderate speed until familiar with the controls and operations of the builder.
17. Manual tamper lock must be latched before any movement of the tamper or bridge.

Module Builder Owner's And User's Statement Of Responsibility

I have had explained to me and accept responsibility for the following:

I understand this module builder is a heavy, powerful, and bulky unit of equipment capable of causing injury or death when used improperly. I accept the responsibility associated therewith.

I understand the danger of high voltage power lines in relation to high profile module builder equipment and accept responsibility for its safe use in dangerous surroundings.

I understand the risk associated with moduling seed cotton with excessive moisture content and the heat generated from such moduling of high moisture seed cotton. I agree to assume all responsibility for the manner in which this module builder is used with respect to moisture.

I understand that neither I, any of my workers, nor anyone else should be allowed to work in or under the module builder container area while it is in operation and/or unblocked, unpinned, or unstabilized for any reason.

I understand the tamper, tamper cylinder, and all cylinder supported components can, and will fall rapidly and without warning, if hoses are disconnected unsafely and/or upon component failure. Therefore, I accept responsibility to avoid and to cause my workers to avoid working in an area or manner that would cause unnecessary risk of injury or death.

I hereby acknowledge that I have been adequately instructed in the safe hitching, pinning, raising, lowering, servicing, and general operation of this module builder and accept responsibility for same.

I recognize that this list of potential risk and dangers is not necessarily complete and agree to exercise good common sense and judgement in the use of this module builder.

_____
Owner

_____
Date

Specifications

	Intermediate **Model**		***Stripper*** **Model**	
DUMP HEIGHT (Ground To Top Rail)	9'- 6"	(114.000")	11'- 0"	(132.000")
OPERATING HEIGHT (Wheels Retracted, Tamper Extended)	19'-10.188"	(238.188")	21'- 4.188"	(256.188")
ROAD HEIGHT (Wheels Extended, Tamper Retracted)	13'-10.625"	(166.625")	15'- 4.625"	(184.625")
MAXIMUM HEIGHT ****Reference Only - Not Recommended** (Wheels Extended, Tamper Extended)	21'- 1.188"	(253.188")	22'- 5.188"	(269.188")
OVERALL WIDTH	11' -2"	(134.000")	11'- 2"	(134.000")
OVERALL LENGTH	39'- 4"	(472.750")	39'- 4"	(472.750")
WHEEL BASE (Pivot Pin to Center of Wheels)	22'- 8.625"	(272.625")	22'-8.625"	(272.625")
MAXIMUM MODULE SIZES BUILDER WILL BUILD				
BOTTOM WIDTH	7'- 3.5"	(87.500")	7'- 3.5"	(87.500")
LENGTH	32'- 1.313"	(385.313")	32'- 1.313"	(385.313")
HEIGHT	8'- 0.625"	(96.625")	9'- 6.625"	(114.625")

MAXIMUM OPERATING TEMPERATURE	150°F for extended periods
MAXIMUM OPERATING PRESSURE	2,100 PSI
MAXIMUM TRACTOR RPM	1300 RPM
TRACTOR PTO	1000 RPM PTO
OIL RESERVOIR CAPACITY	90 gallon
HYDRAULIC FLUID	High quality mineral based in 80-180 SUS range

Operating the Module Builder

IMPORTANT: PLEASE READ!

INITIAL PREPARATION UPON RECEIPT

Prior to shipment, the module builder has been carefully checked for defects, filled with oil, and operated under unloaded conditions. The hydraulic pressure has been set and the entire unit made "field ready".

The initial preparation required of the operator consists only of reinstating the changes required for shipment. The operator will need to free the hydraulic hoses attached to the hydraulic pipes to prevent damage in transit. On Chain Drive units, REMOVE the bolt installed through the side chains to prevent bridge from moving during shipment. All nuts, bolts, hydraulic fittings, and lock collars should be checked before initial operations (they may have worked loose during shipping). The oil level in the hydraulic tank should also be checked.

Although there are not many places to lubricate, the few that are involved are important. **DAILY -** tension rollers (4) and drive shaft bearings (4) on Chainless units. **WEEKLY** - front and rear shaft bearings on Chain Drive units; wheel slides assemblies and rear door hinges on all units.

Adjustments on the Chain Drive and Chainless type bridge will need to be checked weekly. This will insure that the bridge will continue to operate properly as well as avoid unnecessary wear during the module building season. Please read and familiarize yourself and your operators with the adjustment procedures and components of the type of bridge on your module builder.

Most **IMPORTANT** is the attachment of the pump to the tractor PTO. The tractor MUST have 1000 RPM PTO. Make sure you understand the rotation of the pump and secure the torque control arm to the tractor to prevent it from coming off during operation. Each tractor has a slightly different configuration, and the attachment must be devised to the operator's satisfaction. A little extra time and effort is well spent to achieve a safe placement. Testing, once the attachment is made, should be at a slow PTO rotation. Many hours of successful usage can be expected if these preliminary steps are taken.

HOOKUP OF THE MODULE BUILDER TO THE TRACTOR

Hookup of the module builder to the tractor is similar to the procedure used to hook up to any conventional trailer. Using the tractor lift arms and a hitch draw bar, the tractor is backed up to the module builder and the pin is inserted when the holes in the tongue and draw bar are aligned. (Our module builders are equipped with a tractor mounted hydraulic pump and a drive shaft is not used.) PTO speed of approximately 625 RPM, which is equivalent to 1300 RPM engine speed, is necessary to operate the module builder systems.

IMPORTANT: The pump is to be secured to prevent it from rotating or backing off the PTO shaft.

When these hookups are completed, a stop or restraining block should be installed on the guide of the hydraulic control lever of the tractor to prevent raising the draw bar too high. To install the stop at the maximum safe position, the tamper should be moved to the front of the module builder and the wheels lowered to cause the module builder to rise. Once the module builder is raised, the draw bar on tractor should be raised until the builder is level; then, the stop should be installed on control lever. All hydraulic functions operate from the pump itself; thus, no hydraulic hoses are needed to connect to the tractor "quick couplers".

Set-Up Procedures
Manual Tamper

IMPORTANT: The following procedures have been set in the factory. They should be used only as a reference if it is necessary to make adjustments following replacements, and only with the guidance of a qualified service person.

1. Check all hydraulic hoses and fittings for tightness.

2. 2-SPOOL VALVE - With tractor running at 1300 RPM, hold the lever to retract the tamping cylinder. Once the tamper is all the way up, the pressure gauge by the 2-spool valve should read 2000 psi. If not, follow the following instructions for setting pressure.

   On right hand side of 2-spool valve, remove the relief valve cover and loosen the jam nut. Hold the lever to retract the gate or wheel cylinders, and with gate or wheel cylinder all the way up, adjust the relief valve adjusting screw with a hex key wrench to 2000 psi. Turn clockwise to increase pressure, and counterclockwise to decrease pressure.

3. CROSS PORT RELIEF VALVE - With tractor running at 1300 RPM, hold the lever to move the bridge to rear. With bridge up against rear stop, quickly check the pressure gauge. It should read 1300 to 1500 psi. Repeat above steps to check front. To adjust pressure setting on bridge transverse, locate cross port relief valve behind platform. For transverse to rear adjustment, adjust valve located on top. Remove cap and loosen jam nut. Using hex key wrench, turn adjusting screw clockwise to increase pressure, and counterclockwise to decrease pressure. Set pressure to range of 1300 to 1500 psi. For transverse to front, locate valve on bottom, and follow above steps for rear.

Operating Procedures
Manual Operation

1. Start tractor and engage the PTO.

2. Set the tractor at 1000 - 1300 RPM. **Do not exceed tractor RPM of 1300.**

3. Situate operator in seat on platform. Familiarize operator with controls. See *Figure #1.*

4. To lower builder into module building position:
   a. Raise builder by pulling “Axle Operation” lever on valve located in lower left corner of platform to relief pressure on transport brackets.
   b. Remove transport brackets from wheel cylinder. Hang transport brackets on cross bar in pin hole supplied.
   c. Push “Axle Operation” lever to lower builder base to ground.
   d. After lowering builder and making firm contact with ground, pull lever until wheels just make contact with ground.

5. Locking cylinder tower in tamping position.
   a. Pull tamping lever until cylinder tower base plate extends and locks into tower retainers.
   b. Make sure base is locked in firmly on both sides before proceeding.

Operating Procedures
Manual Operation

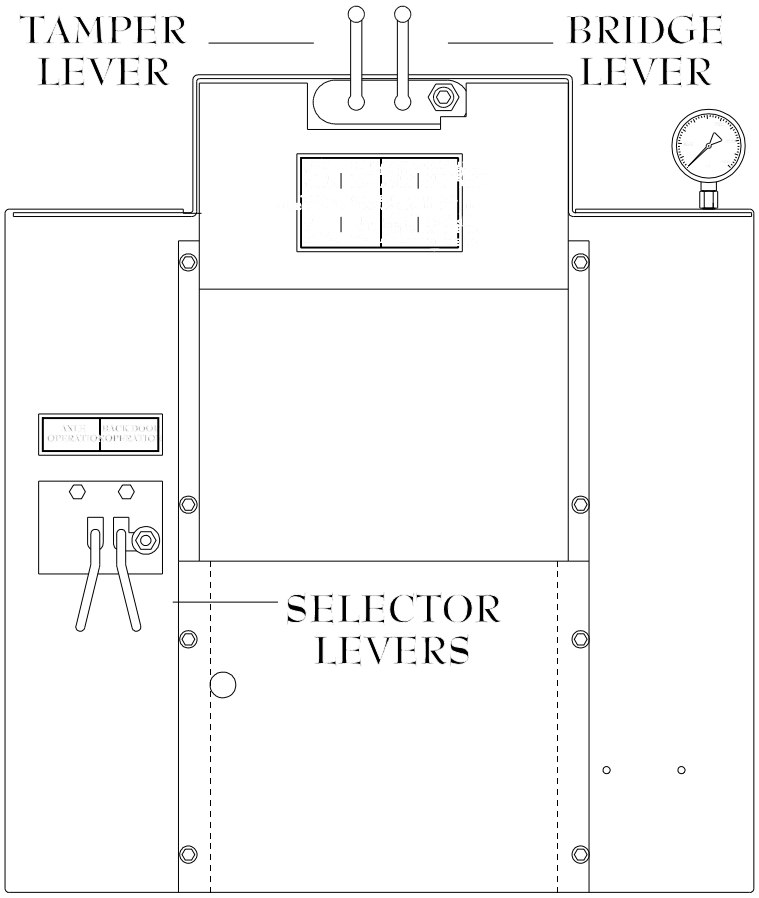

Figure #1

6. Operating tamper.
   a. Pull tamping lever to raise tamper. See *Figure #1.*
   b. Push tamping lever to lower tamper. See *Figure #1.*
   c. Tamper can be used to level dumped cotton by lowering tamper until slightly lower than highest dump and transversing bridge from front to rear. Continue this procedure until load is level.
   d. Begin tamping after cotton has reached a depth of at least four(4) feet in builder.

7. Operating the bridge.
   a. Pull bridge lever to move bridge to front. See *Figure #1.*
   b. Push bridge lever to move bridge to rear. See *Figure #1.*

8. Moving builder from module and preparing to build a new module.
   a. Move bridge to front of builder.
   b. Open rear gate completely by pulling rear gate lever.
   c. Raise builder by pulling axle lever on 2-spool until axle cylinders are fully extended.
   d. Move to tractor and raise 3-point lever on tractor until builder is level.
   e. Move tractor and builder forward until rear gate of builder clears finished module, or new build site is determined.

CAUTION: Be aware of tower and tamper height while moving builder near power lines.

Operating Procedures
Manual Operation

f. After clearance from module is obtained, or new site located, lower 3-point until front of builder is firmly on ground.
g. Move to operator platform on builder.
h. Lower builder to ground by pushing axle lever and retracting axle cylinder until builder is firmly on ground.
i. Pull axle lever until wheels just touch ground.
j. Push gate lever until gate is completely closed and properly latched.
k. Builder is now ready to build next module.

9. Preparing builder for transporting.
   a. Move builder from module. Follow STEP 8 - Items a through e.
   b. Make sure bridge is at front of builder and secured, so it can not move during transportation.
   c. Lower tamper to its lowest position, or until it rests on bridge pads.
   d. Continue to pull on tamping lever which holds pressure on tamping cylinder. Pull on unlocking lever to unlatch cylinder tower.
   e. While holding unlocking lever open, push on tamping lever to lower cylinder tower.
   f. Check rear gate. Make sure it is closed and latched properly.
   g. Pull axle lever to raise builder to highest position.
   h. Install transport brackets on both wheel cylinders. Transport brackets should be used whenever transporting builder from field to field; or, over average distance on the road.
   i. Disengage PTO on tractor.
   j. Remove gear pump from PTO and place in transport pin on tongue and secure.
   k. Raise 3-point to level builder and lock 3-point lever in tractor.
   l. When moving builder be aware of short turning radius of tractor compared to tongue of builder.
   m. Be aware of width of builder, including hose rail on LH side as sitting in tractor seat.
   n. Be aware of extended length of builder.
   o. Be aware of moving builder through ditches or other uneven surfaces, due to the lower clearance of builder from ground. Dragging can occur.
   p. Slow moving vehicle sign is required in most states.

Hydraulic Pump

Recommended Mounting Procedure

Hydraulic pump mounts to 1000 RPM, 21 tooth splined PTO shaft on the tractor. PTO shaft should extend into pump a minimum of 2½". The torque arm should be slid into the pump mount bracket. Then slide bracket onto the tractor draw bar. The hammer bar clamp must be removed from the tractor draw bar. Secure pump mount bracket to draw bar with 3/4" diameter pin.

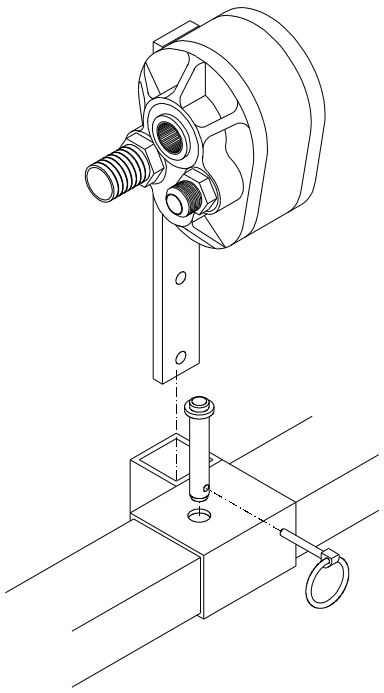

Module Builder Guidelines

LONG DISTANCE MOVING

Depending upon whether you have a *Stripper* model(tall) module builder, or a *Intermediate* model module builder, you will be from 15'-4.625" to 13'-10.625" high, and overwidth, as well, while in transport position. This is a "permit load" and requires a planned route to avoid construction, low underpasses, and other special situations. You will need to contact the appropriate regulatory agency in the state(s) involved to assure safe movement.

The bridge (tamper unit) should be placed at the front and secured to prevent its rolling back during shipment.

Wide load signs and other appropriate warning devices must be used on the front of the tow truck and on the back of the module builder.

Extreme caution should be used if "dollies" are placed inside the container area of the builder, because builders tend to be top heavy and "dollies" do not permit a wide wheel base.

The transport cylinders should be pinned for long distance moving.

Do not transport at night, during inclement weather, or otherwise, when conditions dictate that movement should not occur.

Do not transport over 45 MPH, and do not transport on flotation tires.

Air brakes on dollies are advisable.

Allow plenty of room to stop, and do not follow closely the vehicle which precedes the tow truck.

Use signal and brake lights, and exercise extreme caution on all turns. Intersection signal lights may be low even though you are on the "permitted route". AVOID POWER LINES.

When possible, use roads with wide and/or paved shoulder.

Allow plenty of time to reach your destination.

MANEUVERING THE MODULE BUILDER

Individual tractors and hitches will afford different degrees of turning mobility. Care should be exercised by the driver when turning or aligning the module builder. The same care should be exercised when turning, backing, or otherwise, maneuvering the module builder, as with any implement of similar size. Be especially careful near bridges and ditches. Also, caution all drivers of the height of the module builder and the corresponding danger associated with high voltage electrical lines. Left turns, especially from highways, require great care because traffic may not recognize the intent of the tractor operator. Escorts should be used when necessary.

SELECTING A SITE FOR THE MODULE WITH OR WITHOUT PALLETS

Extensive consideration should be exercised when selecting or preparing a location to build the module. This is especially important if you plan to store the module on a turnrow for any length of time when rainfall is a possibility, particularly if pallets are not to be used.

Select a well-drained module storage site to minimize the possibility of lint and seed damage by water seeping into the modules after rains.

Module Builder Guidelines

Leave modules on a well-drained turnrow or move them to a storage area immediately after completion. The storage area should be accessible to transport equipment within 48 hours after a heavy rain; it should be located adjacent to an all-weather road. Modules should not be left on turnrows which may become inaccessible following heavy rains. Caution surrounding residents or passers-by of the extreme fire danger associated with seed cotton and be aware of prevailing winds and the danger they pose in the event of a fire. Avoid building a module with a residence nearby and recognize that at least 50 feet should be clear of obstacles to allow for pulling off and loading.

"BUILDING" THE MODULE

Normally, three (2-row) harvesters per module builder in 1½ bales per acre yield are used for the most efficient operation of module building. The number of harvesters per "Builder" will vary according to field and the size of the harvester.

Dumps should be spaced in the builder to allow the least amount of raking possible; in other words, one to the front, one to the rear, and one in the middle. The tamper's traverse and tamping movements are controlled by the "Push-Pull" levers on the platform. The operator "pushes" to traverse the tamper to the rear, and "pulls" to bring it to front. To lower tamper, he "pushes" lever; to raise tamper, he "pulls lever".

To level cotton, the operator should lower the tamper slightly lower than the highest level of cotton and use the traverse of tamper to "roll" or move the cotton to the low places. Dragging and raking the cotton should be avoided as much as possible as this causes lumps or balls in the cotton which are difficult to tamp and gin. This involves unnecessary time, which in excess, causes the harvesters to wait between dumps.

After the first two or three dumps are made and leveled out, the tamping begins. Care should be taken to pack the module ends extra firmly since they are most susceptible to damage in transport. This is very important in building palletless modules.

It is not necessary to level each dump if they are placed in the proper location (spaced evenly throughout the module). Tamping should be continued between dumps. Barring a breakdown of harvester equipment, the operator should repeatedly run the tamper until the module is completed.

It is important that the module be firm and even, with no low or shallow spots which will collect and hold rain, and to allow the sides of the module to shed rain water during prolonged storage.

Do not operate tamper while harvest machines are dumping or adjacent to the module builder. This will avoid the possibility of damage to the lid or basket of the harvester and bridge area of the module builder.

When possible the operators of the module builder and harvesters should be facing each other while the harvester is dumping. This "eye contact" will aid in the smooth operation of both units and improve efficiency because it allows "signaling", such as where to dump.

MOVING FROM THE MODULE

Once the tarp has been spread, if one is to be used, and the operator is ready to move from the module, the tamper should be moved to the front. The operator then unlatches and raises the rear door, using the “Rear Gate” hydraulic valve on the operator platform.

The operator should then lower the wheels, thus raising the module builder. When fully raised and leveled, the sloped sides of the builder will clear the module approximately 2" on each side, and the operator may drive straight forward.

NOTE: Before moving or raising the module builder, be certain the tamper is to the front. Disengage PTO before pulling forward. **AVOID ELECTRICAL LINES!**

Module Builder Guidelines

LOADING AND UNLOADING MODULES WITHOUT PALLETS

Modules built on the ground, without pallets, are transported on a bed-mounted truck or tractor-type trailer with a multibeam tiltbed using mechanically powered conveyor chains for self-loading and unloading.

It is very important that palletless modules be tamped extremely well on both ends to prevent sloughing while transported. These modules should be built on ground area that is elevated, and as firm as possible, to assure improved traction for the vehicle and adequate drainage should it rain before moving.

Complete step-by-step procedure for loading and unloading a palletless module is explained in the Operations Manual accompanying both truck or tractor type chain-bed movers.

Care, desire, and ability to understand the operational procedure, thus improving technique and performance by the operator, is extremely important. Failure to recognize this fact could cause unnecessary vehicle and power-train breakdowns, module separation, and overall inefficiency during the peak harvesting and ginning season.

MONITORING THE TEMPERATURE

While stored cotton has proven to increase in grade, care must be exercised to monitor the internal temperature of the module daily for a few days. Several methods are available; however, the least complicated is the use of a 36 inch thermometer inserted into eight places on the module, three on each side and one on each end. Record temperature at each of the eight areas for four days (or longer) until temperature begins lowering and assuring the operator that heating will not occur. Should the temperature reach 120 degrees, the module should be ginned immediately. Most modules will reach 95-110 degrees and then drop to the outside temperature. To avoid problems, dump into trailers that will be ginned immediately during periods of high moisture such as early season, early morning, and late at night. Regions vary in moisture problems. With good common sense, this potential problem can be avoided.

TARPING

A variety of tarps and tie-down procedures are now available. The important point is to protect the cotton from wind, rain, etc., thus insuring the maintenance of quality. Tarp all modules to protect your investments and profit!

In some areas such as West Texas, Arizona, and New Mexico where rain is not generally a problem, it is possible at times to leave the cotton uncovered. If this is done, the cotton will not transport without a cover or van on the truck at normal highway speeds. We recommend tarping every module.

Storing the Module Builder

1. Set module builder on blocks and remove weight from tires.
2. Cover breather on oil reservoir.
3. Lubricate all zerk fittings.
4. Oil all drive chains.

Lubrication and Maintenance



CAUTION: STOP ENGINE, LOCK PARKING BRAKE, AND DISCONNECT PUMP FROM TRACTOR PTO BEFORE SERVICING MODULE BUILDER.



IMPORTANT: THE LUBRICATION PERIODS RECOMMENDED ARE BASED ON NORMAL USAGE. SEVERE OR UNUSUAL CONDITIONS MAY REQUIRE MORE FREQUENT LUBRICATION.

Oil Recommendations For Mobile Hydraulic Systems

The oil in a hydraulic system serves as the power transmission medium. It is also the system's lubricant and coolant. Selection of the proper oil is a requirement for satisfactory system performance and life.

Recommendations presented here will assist in the selections of suitable oils for use with CrustBuster/Speed King products. CrustBuster/Speed King does not publish a recommended oil list by brand name or supplier due to the extremely wide variety of oil types on the market.

In most cases, use of these recommendations will lead to selection of a suitable oil. However, due to the complex nature of oil formulation, the variety of oils available and peculiarities of individual hydraulic applications, there will be rare instances where an oil selected on the basis of these recommendations will yield unsatisfactory results. CrustBuster/Speed King cannot be responsible for such exceptions. In this respect, the customer is encouraged to consult his CrustBuster/Speed King representative when selecting an oil.

IMPORTANT FACTORS IN SELECTING AN OIL

ADDITIVES - Hydraulic fluids contain a number of additive agents which materially improve various characteristics of oil for hydraulic systems. These additives are selected to reduce wear, increase chemical stability, inhibit corrosion and depress the pour point.

Pump performance and reliability are directly affected by the antiwear additive formulation contained in the oil. Oils providing a high level of antiwear protection are recommended for optimum performance and long life.

VISCOSITY - Viscosity is the measure of fluidity. The oil selected must have proper viscosity to maintain an adequate lubricating film at system operating temperature.

In addition to dynamic lubricating properties, oil must have sufficient body to provide an adequate sealing effect between working parts of pumps, valves, cylinders, and motors, but, not enough to cause pump cavitation or sluggish valve action. Optimum operating viscosity of the oil should be between 16 cSt (80 SUS) and 40 cSt (180 SUS).

"Viscosity index" reflects the way viscosity changes with temperature. The smaller the viscosity change, the higher the viscosity index. The viscosity index of hydraulic system oil should not be less than 90. Multiple viscosity oils, such as SAE 10W-30, incorporate additives to improve viscosity index (polymer thickened.). Oils of this type generally exhibit both a temporary and permanent decrease in viscosity due to oil shear encountered in the operating hydraulic system. The actual viscosity can, therefore, be far less in the operating hydraulic system than what is shown in normal oil data. Accordingly, when such oils are selected, it is necessary to use those with high shear stability to insure that viscosity remains within recommended limits while in service.

CHEMICAL STABILITY - Oxidative and thermal stability are essential characteristics of oils for mobile hydraulic systems. The combination of base stocks and additives should be stable during the expected lifetime of the oil when exposed to the environment of these systems.

Lubrication and Maintenance

SUITABLE TYPES OF OIL

Crankcase oil having letter designation SC, SD, SE, or SF per SAE J183 JUN86. Note that one oil may meet one or more of these designations.

ANTIWEAR HYDRAULIC OIL - These are produced by all major oil suppliers and should consist of good quality base stocks compounded with antiwear, antioxidation, and antirust additives.

CERTAIN OTHER TYPES OF PETROLEUM OIL are suitable if they meet the following provisions:
1. Contain the type and content of antiwear additives found in the above designated crankcase oils.
2. Have sufficient chemical stability for mobile hydraulic system service.
3. Meet the viscosity recommendations shown in the flowing tables.

OIL VISCOSITY RECOMMENDATIONS

CRANKCASE OILS

Hydraulic System Operating Temperature Range	SAE Viscosity Designation
-23°C to 54°C(-10°Fto130°F)	5W,5W-20,5W-30
-18°C to 83°C(0°F to 180°F)	10W
-18°C to 99°C(0°F to 210°F)	10W-30, 10W-40
10°C to 99°C(50°F to 210°F)	20-20W

ANTIWEAR HYDRAULIC OILS

Hydraulic System Operating Temperature Range*	ISO Viscosity Grade
-21°C to 60°C(- 5°F to 140°F)	22
-15°C to 77°C(5°F to 170°F)	32
- 9°C to 88°C(15°F to 190°F)	46
- 1°C to 99°C(30°F to 210°F)	68

*Temperatures shown are cold(ambient)start-up to maximum operating. During cold start-up, avoid high-speed operation of hydraulic components until the system is warmed up to provide adequate lubrication.

CLEANLINESS

Thorough precautions should always be observed to insure the hydraulic system is clean:
1. Clean(flush)entire system to remove paint, metal chips, welding shot, etc.

2. Filter each change of oil to prevent introduction of contaminant into the system.

3. Provide continuous oil filtration to remove sludge and products of wear and corrosion generated during the life of the system.

4. Provide continuous protection of the system from entry of airborne contamination by sealing the system and/or by proper filtration of the air.

5. Maintain the proper oil level and regularly service filters, breathers, and reservoirs. The importance of these precautions cannot be overemphasized.

6. Take precautions to prevent moisture contamination. Change fluid whenever contamination occurs because even small amounts of water can have a substantial effect on system performance, as well as induce corrosion and oil breakdown.

Lubrication and Maintenance

MAINTENANCE

Reservoir capacity -90 gallons to fill tank -106 gallons to purge system

Replace return filter after first 50 hour operation, then replace suction and return filters every 500 hours or annually, whichever is first.

Keep oil visible in sight gauge at all times.

Keep all parts clean of accumulated dirt. A little time and effort spent in this area will prevent abrasive action that could cause excessive wear.

Use an SAE multi-purpose type grease to lubricate at intervals shown. Clean fittings thoroughly before lubricating. Replace missing or damaged grease fittings immediately. DO NOT OVER-LUBRICATE.

SERVICE / DAILY	Tension roller and drive shaft bearings on Chainless units
SERVICE / WEEKLY	Wheel slide assemblies Back door hinges and locking device (2 on each side) Grease all bearings once per week

Management Guidelines

USING THE SYSTEM

The Cotton Module Builder will be an asset to the grower and ginner if properly used. Following a few common sense rules will aid greatly in the successful operation of the equipment and handling operation. The most important are listed here as guidelines for the operation.

1. Start using your Module Builder at the beginning of cotton harvest. This will give the operator a chance to become familiar with its use and be trained by the time you run out of trailers.

2. Having a module system does not necessarily mean you have to store cotton. It can be put on pallets, carried to the gin, and ginned on the same priority as trailers if desired. You still increase harvester efficiency and can continue harvesting without waiting for trailers.

3. Dry cotton stored three weeks or longer normally increases in grade.

4. It is desirable to have at least one conventional trailer per harvester to handle cotton deemed unsuitable for storage, and to use, if necessary, while the topping out and moving operations are being completed. In *picker* cotton, trailers should be used in the "scrapping operation" to prevent excessive travel of the pickers. When finishing a field, avoid building modules of less than five bales.

5. Beware of storing early season cotton. It may be wet or green, thus tending to heat. In the event you have cotton which is heating and reaches a temperature of 120 degrees, it must be ginned immediately. Have an agreement with your gin to do this. You are helping the gin and other growers by storing your cotton, so they shouldn't object to your ginning occasionally out of turn with a module.

6. Only cotton having a moisture content of 12% or less can be safely stored. Several methods of checking moisture are available. One guideline a field hand can use is to check the leaf matter or brace immediately behind the boll. If it shatters when rolled between thumb and finger, the cotton should be dry. If it doesn't break easily, cotton is too damp for safe storage.

Management Guidelines

7. Cotton should be tarped immediately. Thunderstorms occur suddenly, and once the cotton is wet, it is difficult to gin and cannot be safely stored. Canvas tarps should not be tied too tightly as cotton will expand and tarps will shrink following rains, thus damaging tarps at grommet locations.

8. Module temperature should be monitored at least daily for the first four days or until the temperature reaches its peak and is receding to outside temperature. Average temperature in dry cotton should be 89 to 95 degrees. If temperature exceeds 110 degrees, a very close watch is necessary. Should it continue to climb and reach 120 degrees, transport the module to the gin and gin off immediately.

INSURANCE AND GIN YARD LOGISTICS

1. The most economical coverage is usually through the gin stock floater policy.

2. Before storing seed cotton, study and meet all insurance company regulations, including dollar value allowed in one group, minimum distances between groups, liability limits for any one loss, covering requirements, etc.

3. Seed cotton modules command favorable insurance rates because of the low loss experience. Every effort must be made to prevent losses so that these favorable rates can be maintained or lowered.

4. Arrangements for ginning should be worked out with the ginner, but it is preferable to gin stored cotton in large blocks to minimize two-sided bales and improve the efficiency of the ginning operation.

5. As a rule of thumb, one module transporter can keep a 10 bale per hour gin operating at full capacity on a 10 mile round trip if modules are unloaded under the suction telescope or module receiver to free the transporter for continuous hauling.

QUALITY PRESERVATION - LINT AND SEED

Seed cotton stored in modules can gin out exceptionally high quality lint. The quality of seed can also be maintained at high levels. To maintain the quality of both products, several practices must be followed.

The following guidelines are based on research conducted under weather and field conditions normally encountered in the Mid-South, Southeast, and Southwest areas of the cotton belt.

1. Remove weeds and grasses from fields during the growing season.

2. Defoliate when cotton is at least 60-70 percent open and all bolls are matured. Time your defoliation on a maximum of 2-3 weeks before harvesting. If re-growth occurs before harvesting, defoliate a second time. Moisture in green leaves and stems harvested and stored with seed cotton can cause lint and seed to deteriorate.

3. Store seed cotton harvested during the driest part of the day. Seed cotton mass with moisture of 12 percent or less can be safely stored with no significant damage to lint or seed. Test seed moisture from several heights on the cotton plant.

4. Eliminate depressions in the top of the module by making the center of the module slightly higher than the ends. Make the module firm and rounded from end to end. Water will seep through most tarpaulins after an extended period of time, so check the tops of modules after every rain and remove all collected water.

5. In the rain belt, cover modules immediately. Cotton is the most satisfactory material to use for tarps. A cotton tarp protects the module, and, at the same time, does not allow any build-up of condensation underneath the cover. Tarpaulins should be approximately 4-5 feet longer and 3 feet wider than the module to allow for shrinkage and still fold over sides and ends.

Management Guidelines

6. Prevent damage from rainfall collecting around the bottom of the module by placing it on a well-drained site. A high well-drained turnrow or central storage area enables the producer or ginner to move modules whenever he wants.

7. Both lint and seed damage can result from heating; therefore, it is especially important to monitor the temperature of seed cotton modules until the temperature has stabilized. Temperatures of 80-105 degrees the first 3-5 days are safe. If the temperature in a module reaches 120 degrees, the cotton should be ginned immediately. (Arrangements should be made in advance with your ginner.)

8. Apply tarpaulin as soon as possible to prevent water-soak damage in rainfall areas. Tie down the tarpaulin securely, allowing a little slack for tarp shrinkage and module expansion, avoiding damage to grommets. After tarpaulin is removed, be sure to dry and clean thoroughly before storage. Do not store on concrete or in an area accessible to rodents.

9. Store metal pallets in a stack accessible and easily handled with transport trailers. Secure stacks of pallets firmly while in storage to avoid damage from wind.

Bridge Adjustment

IMPORTANT: Bridge adjustments should be checked after building two or three modules and weekly after that. Proper adjustments are critical to trouble free operation.

Chain Drive

NOTES:
1. Chain adjustments that are too **tight** will result in broken drive shafts, worn or broken sprockets and bearings, and result in shorter chain life.
2. Chain adjustments that are too **loose** will result in jumping chain, and abnormal chain and sprocket wear.

Follow these steps for re-adjusting CHAIN DRIVE bridge components.

STEP 1 Move bridge to front to make adjustments.
STEP 2 Locate take-up bolts on bridge side. NOTE: If take-up is adjusted to end, follow **STEPS 6-10.**
STEP 3 Loosen 1.000" locknut. (Nut closest to bridge ends.)
STEP 4 Tighten inside 1.000" nut until chain touches middle and opposite end chain guides.
STEP 5 Lock locknuts on ends. Make sure chain has not twisted.
STEP 6 If take-up bolt is at end of take-up, loosen take-up bolt and remove from guide.
STEP 7 Remove chain from end of take-up bolt.
STEP 8 Find connector in chain (approximately five (5) inches from end); remove short section of chain.
STEP 9 Connect chain to end of take-up bolt.
STEP 10 Slide back in guide and follow STEPS 2-5 for tightening.
NOTE: Do both sides the same to keep bridge square.

Chainless

Follow these steps for re-adjusting CHAINLESS bridge components.

STEP 1 Raise tamper to UP position and move bridge to front of builder before making adjustments.
STEP 2 **DRIVE WHEEL PRE-ADJUSTMENT:**
Loosen 1/2" bolts on both inside and outside bearing mount plates. Loosen center bottom 3/4" nut on bearing plate all thread. Using top 3/4" nut on both inside and outside bearing mount plates, raise drive wheel so it is just in contact with I-beam. Leave all bolts loose.
STEP 3 **INSIDE SLIDE ADJUSTMENT:**
Inside slide adjustment bolts (2 per slide) are located on inside lower corners of bridge. Loosen jam nut and tighten square head adjustment bolts equally until slides make contact with I-beam, then lock jam nut.
STEP 4 **TENSION ROLLER ADJUSTMENT:**
Tension rollers are located on outside under I-beam lip. Loosen 3/4" jam nut on top of tension roller bracket and tighten 3/4" hex nut until tension roller touches I-beam, then turn nut one full turn tighter. Lock 3/4" jam nut and 3/4" hex nut together.
STEP 5 **OUTSIDE ROLLER ADJUSTMENT:**
Outside rollers are located on end of outside retainer brackets. Adjustment nut and spring are located in lower center of outside retainer bracket. Both outside rollers should be adjusted equally per side until roller makes contact with I-beam. After contacting I-beam, turn adjustment nut one-half turn tighter.
STEP 6 **DRIVE WHEEL ADJUSTMENT:**
Loosen top nut on bearing plate all thread, then tighten bottom nut until drive wheel contacts top of I-beam. After contacting I-beam, tighten bottom nut one full turn. After adjustment, measure between bearing plates (both inside and outside) and adjustment ear on bridge. Make sure both measurements are the same.
THIS IS CRITICAL!!!
STEP 7 **FINAL CHECK:**
After adjustments are made, move bridge to front bumper and hold pressure on bridge. If drive wheels slip, repeat STEP 6. When adjustments are satisfactory, tighten bearing plates and lock nuts on all thread adjustments.

Trouble Shooting Guide - General

The following trouble shooting guide is for general problems that will arise in hydraulic systems. This guide can be used to narrow problems down to a specific item in the system. After that specific item is found, the specific guide that follows should be used.

I. No Flow

1. Pump not receiving oil.	a. Make sure pump is not cavitating. b. Replace dirty filters. c. Check and clean inlet line. d. Check reservoir for proper level. e. Check pump for damage. Replace or repair if necessary.

II. Low Flow

1. Pressure setting to low.	a. Adjust settings.
2. External leak in system.	a. Check lines for leaks or broken lines.
3. Pump RPM incorrect.	a. Check tractor RPM. Set to 1300 RPM. DO NOT EXCEED.
4. Damaged parts.	a. Check pumps, valves, and motors for damage. Replace if necessary.

III. Excessive Flow

1. RPM of pump incorrect.	a. Check tractor RPM. Set to minimum - 1000 RPM; maximum - 1300 RPM. DO NOT EXCEED 1300 RPM.

IV. Erratic Pressure

1. Air in fluid	a. Tighten leaky connections. b. Check reservoir for proper level. c. Bleed air from system.
2. Worn relief valve.	a. Replace relief valve.
3. Contamination in fluid.	a. Replace filters, purge system, replace fluid.
4. Worn pump, motor, or cylinders.	a. Replace or repair defective part.

V. No Movement

1. No flow or pressure	a. See **No Flow** section.
2. Limit or sequence valve- inoperative or misadjusted.	a. Reset or replace valve.
3. Worn or damaged pump or motors.	a. Replace or repair defective part.
4. Mechanical bind.	a. Find bind and repair parts.

VI. Slow Movement

1. Low flow.	a. See **Low Flow** section.
2. Fluid viscosity too high.	a. Check fluid temperature and viscosity. Change fluid if necessary to match conditions.
3. Worn, damaged, or misadjusted motors and pump.	a. Replace, repair, and/or adjust parts.
4. Mechanical bind.	a. Find bind or damaged part and repair.

Trouble Shooting Guide - General

VII. Excessive Heat

A. Pump Heat

1. Cavitation	a. Check proper RPM of tractor. Minimum - 1000 RPM to maximum - 1300 RPM. DO NOT EXCEED 1300 RPM.
2. Air in fluid.	a. Check for leaky fitting. Repair if necessary. b. Check for proper fluid levels in reservoir. c. Bleed air from system. d. Check pump seals and shaft seal journal. Repair if necessary.
3. Relief valve defective.	a. Replace defective relief valve.
4. Excessive load.	a. Check seals, bearings, motor, and pump for damage. Repair if necessary. b. Check for mechanical bind. Correct if found. c. Check for misalignment.

B. Motor Heat

1. Worn or damaged motor.	a. Repair or replace motor.
2. Excessive load.	a. Check for mechanical bind. Repair if found. b. Check for defective seals, bearings, etc. Replace if necessary.

C. Fluid Heat

1. Fluid dirty or low supply.	a. Change filters. b. Replace fluid. c. Check reservoir for proper level.
2. Incorrect fluid viscosity.	a. Check hydraulic fluid viscosity. Change to match conditions.
3. Worn pump, valve, motor, cylinder, or other components.	a. Check all system components for damage. Replace if necessary.

VIII. Excessive Noise

A. Pump Noise

1. Cavitation	a. Check and replace dirty filters. b. Check for clogged inlet line to pump. c. Check tractor RPM. DO NOT EXCEED 1300 RPM. d. Check pump for damage. Replace if necessary.
2. Air in fluid.	a. Check for leaks in inlet line to pump. Repair if necessary. b. Check pump shaft seal for wear. Replace if worn. c. Check reservoir for proper fluid level. Fill if necessary. d. Bleed air from system.
3. Pump misaligned.	a. Check pump attached to tractor for alignment or undue load. b. Check seals and bearings in pump. Repair if necessary.

B. Motor Noise

1. Motor misaligned or damaged.	a. Repair motor if necessary. b. Check seals and bearings in motor. Repair if necessary.

C. Relief Valve Noise

1. Setting too low.	a. Check setting to set-up procedure for manual operation on *page 9.*
2. Worn poppet and seat.	a. Replace relief valve.

Trouble Shooting Guide - Specific

As with all hydraulic systems, each specific component will have unique problems occur. The following is a guide for trouble shooting each specific component. Although this list may not include every problem that arises, it will cover most.

I. Directional Valve 2-Spool

1. Spool will not center after operating.
   a. Spring detent broke or retaining screw has come loose. Call dealer.
   b. Contamination in 2-spool, purge system. Call dealer.
   c. Spool seals worn. Replace seals. Call dealer.
   d. Spool defective. Replace 2-spool. Call dealer.
2. Loud noise in 2-spool.
   a. Restriction in relief cartridge. Remove and clean relief cartridge. Install, reset pressure. See set-up procedure for manual operation on *page 5.*
   b. Restriction in hydraulic lines. Check lines for obstruction.
3. 2-spool lever moves. Nothing happens.
   a. Make sure pump is attached to tractor PTO.
   b. Make sure tractor PTO is engaged.
   c. Make sure valve is open on reservoir.
   d. Check pump for cavitation.
   e. Check lines for restriction.
   f. Check for foreign matter in reservoir (water, etc.)
   g. Make sure pump is turning correct direction.
   h. Check pump for damage.
   i. Check for dirty filters.
   j. Check reservoir for proper fluid level.

II. Bridge - Chain Drive

1. Bridge not even at end.
   a. Chain adjustment not same on each side. Check (Bridge hits bumper ontake up length on both sides. Also, (with bridge at one side, but not the other)front of builder) check number of chain lengths from end of take-up to center of sprocket.
2. Bridge hesitates one direction, then the other.
   a. Chain needs to be tightened.
   b. Check hydraulic motor for failure.
   c. Check sprockets for slipping or broken teeth.
3. Bridge will not move.
   a. Check bridge retainer. Make sure they are not dragging. If retainers are dragging, check for worn parts or loose bolts. Space if necessary.
   b. Check for motor failure.
   c. Check sprockets. Make sure they are not broke.
   d. Check hydraulic line for breakage or if pinched.
   e. Call dealer if problem persists.

III. Bridge - Chainless Drive

1. Bridge will move slowly, or not at all.
   a. Follow chainless bridge adjustment steps *page 16.*
   b. Check for motor failure.
   c. Hydraulic line broke or pinched.
2. Bridge walks when moving. (one side moves before other)
   a. Outside retaining rollers need adjustment. Follow chainless bridge adjustment steps *page 16.*
   b. Adjustment on trailing side drive wheel not adjusted properly. Follow chainless bridge adjustment steps *page 16.*
   c. Inside slide too far from I-beam. Adjust in so contact with I-beam is made.

Trouble Shooting Guide - Specific

III. Bridge - Chainless Drive - *(cont'd)*

3. Bridge is fast and jerky.	a. Check tractor RPM. Make sure it is not over 1300 RPM. If not, RPM can be slowed down to a minimum 1000 RPM to smooth operation of bridge. b. Check main pressure and pressures of cross port valve. See set-up procedures for manual operation *page 5.* c. Call dealer if problem persists.
4. Bridge is faster one direction.	a. Check pressure settings on cross port valve. See set-up procedures for manual operation on *page 5*. b. Contaminated cartridge in cross port valve. Call dealer, replace cartridge.
5. Bridge drive wheels spin.	a. Follow chainless bridge adjustment steps *page 16.* b. Check adjustment. If unit is three(3) years old, drive wheel should be checked for wear. Replace if necessary.

IV. Tamper

1. Tamper falls slowly after	a. Directional valve detent spring loose or broke. Call dealer.
2. Tamping cylinder leaking oil at rod end.	a. Seals worn. Replace seals in tamping cylinder. b. Pressure line tubing broke at base. Call dealer.
3. Tamping cylinder leaking oil at hose end.	a. Check hoses for loose connections. b. Check fittings for loose connections. c. Cylinder head cracked. Call dealer.
4. Tamper not packing module tight enough.	a. Pressure gauge showing wrong pressure. Replace gauge.

V. Wheel Cylinders

1. Wheel cylinders lift one side of builder before other.	a. Possible air in hydraulic lines and cylinder. Purge lines. b. Axle slides restricted. Check slides for grease and gaulding.
2. Wheel cylinders leak down if left in raised position.	a. Check for leaks on wheel cylinder hydraulic lines. b. Seals worn. Replace seals.

VI. Gate

1. Gate will not open or close.	a. Check gate lock for damage. b. Check gate cylinder for damage or leaks. c. Check hydraulic lines for obstruction. d. Make sure pump is attached to tractor and tractor PTO is engaged.
2. Gate will not open all the way.	a. Check for bent or damaged cylinder rod. b. Check hinge for damage.

Front End Components

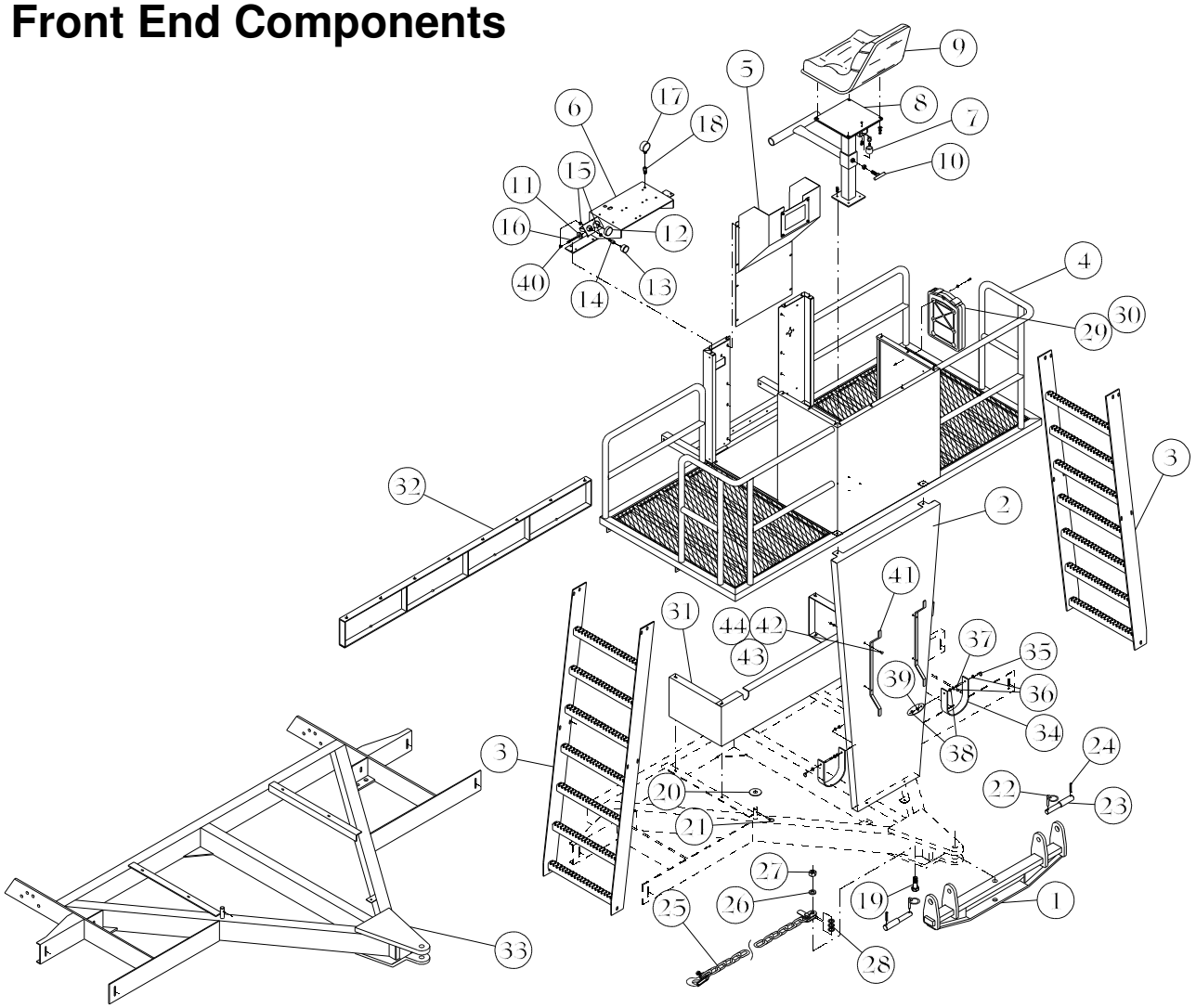

Item	Qty	Part No.	Description
1	1	967877	Hitch
2	1	82561200	Platform Support ***(Intermediate)***
	1	82552100	Platform Support ***(Stripper)***
3	2	80064900	Ladder ***(Intermediate)***
	2	80063100	Ladder ***(Stripper)***
4	1	82549700	Platform
5	1	62595400	Dash Enclosure
6	1	82557000	Dash Plate
7	1	02888600	Door Lock
8	1	80099500	Seat Pedestal
9	1	00234500	Contour Seat
10	1	80762800	T-bolt Weldment
11	1	02093300	Grommet 3/4" ID
12	1	03805900	Temperature Gauge
13	1	03348000	Oil Filter Gauge
14	1	03808300	Adapter Straight 7/16 JICM/1/8 NPTF Bulk
15	2	03809100	Nut 7/16" Bulk Head
16	1	473017	Hose 1/4" x 94" w/7/16" JICF Sw
17	1	00652800	Pressure Gauge
18	1	00610600	Adapter Straight 9/16 JICM/1/4 NPTF Bulk H
19	1	334987	HHCS 1" x 3"
20	1	10373900	Grommet 1" ID

Item	Qty	Part No.	Description
21	1	330456	Klik Pin 7/16"
22	2	334425	Klik Pin 7/16" w/2" Ring
23	2	311662	Extender
24	2	336248	Roll Pin 3/8" x 2½"
25	1	433946	Safety Chain 21,000#
26	1	330399	Washer 1" Lock
27	1	330381	Nut 1" Hex
28	3	335166	Mach Bush 1" x 10 ga
29	1	607416	Manual Storage
30	1	03748100	Owners Manual
31	1	82550500	Reservoir Base
32	1	80026800	Front Ext Channel ***(Intermediate)***
33	1	82538000	Tongue ***(Intermediate)***
34	2	20667200	Hose Carrier
35	2	330928	Klik Pin 3/16"
36	4	330894	Flat Washer 3/8"
37	2	16864100	Pin 3/8" x 2½"
38	4	330035	Hex Nut 3/8"
39	2	330043	Lock Washer 3/8"
40	1	473041	Adapter 90° 7/16 JICM/ 7/16JICF Sw
41	2	20664900	Wire Holder
42	4	334409	Carriage Bolt 5/16 x 3/4
43	4	330845	Lock Washer 5/16
44	4	330811	Hex Nut 5/16

Platform Cab Option

Item	Qty	Part No.	Description
1	1	60571700	Cab Top Assembly w/glass
	1	80249600	Cab Top Only
2	1	60573300	Door Assy -LH w/ glass
	1	80725500	Door -LH
3	1	60572500	Door Assy-RH w/glass
	1	80724800	Door - RH
4	1	00203000	Inside Door Latch - LH
5	1	00205500	Inside Door Latch - RH
6	8	01213800	Screw #14 x 3/4" washer
7	2	10806800	Door Handle
8	2	00162800	Front & Rear Cab Glass
9	2	00164400	Cab Side Glass
10	2	00163600	Door Glass
11	x ft	00206300	Glass Seal (order by foot)
12	4	333385	Screw #10-24 x .750 SCS HD Machine
13	4	333393	Nut #10-24 Lock
14	1	62620000	Cab Blower

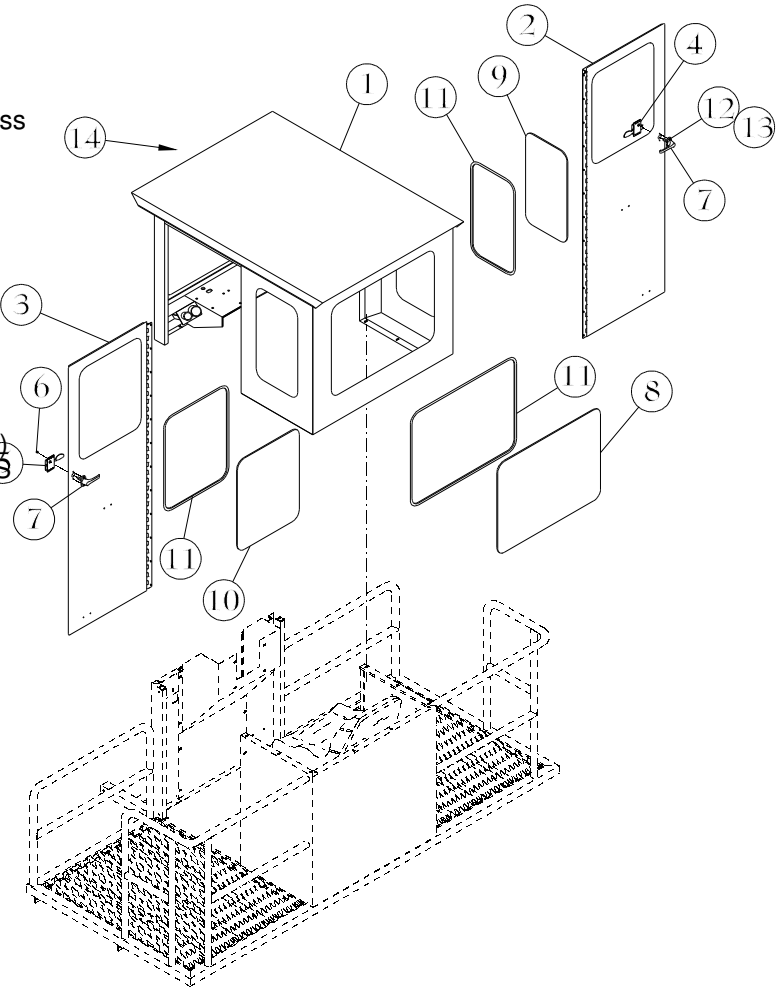

Platform Handrail Option

Item	Qty	Part No.	Description
1	1	80254600	Handrail

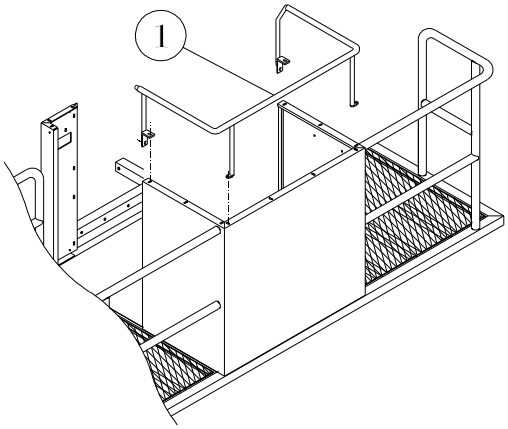

Platform Sunroof Option

Item	Qty	Part No.	Description
1	1	10796100	Sunroof
2	2	11463700	Front Adaptor Plate
3	2	11464500	Rear Adaptor Plate
4	4	00262600	Washer Rubber 1½" OD x 3/8" ID
5	4	00263400	Washer Steel/Rubber 1½" OD x 3/8" ID
6	1	80284300	Front Rail
7	2	80283500	Side Rail
8	4	11457900	Corner Post

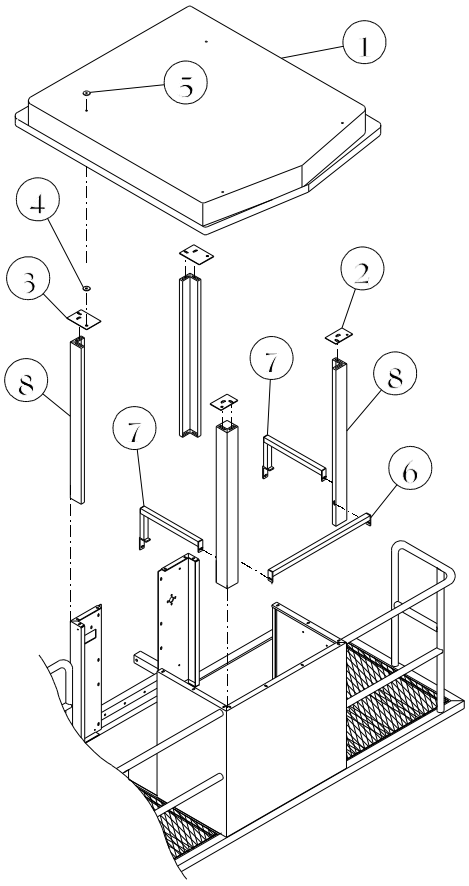

Directional Valve
Manual Tamp

Item	Qty	Part No.	Description
	1	62579800	Directional Valve Assembly w/fittings
1	1	03356300	Directional Valve 2-Spool
2	1	00563700	Adapter 90° 3/8" NPTM-9/16" JICM
3	1	00600700	Adapter 45° 1 1/16" MOR-7/8" JICM
4	3	00601500	Adapter 45° 1 1/16" MOR-1 1/16" JICM
5	1	00603100	Adapter 45° 1 1/16" MOR-1 5/16" JICM
6	1	00607200	Adapter 90° 1 1/16" MOR-1 1/16" JICM
7	1	11799400	Adapter 90° w/3/8" NPTF
		00908400	Handle Kit
		00910000	Seal Kit
		00909200	Clevis Sub-Assembly
		00912600	Spring Center Kit

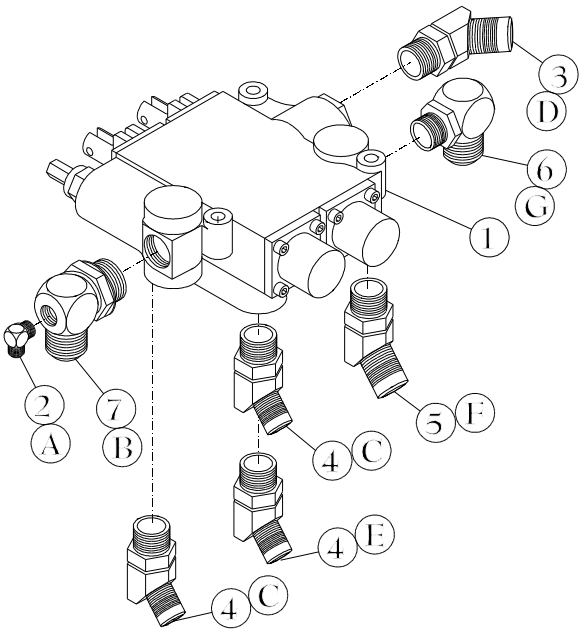

Hydraulic Hose and Routings

Item	Qty	Part No.	Description	From	To
A	1	468504	Hose 1/4" x 12	Adapter #2	Gauge on Dash
B	1	00876300	Hose 1" x 168	Inlet on 2-spool	Pump
C	2	00553800	Hose 3/4" x 38	Port A - 1st spool	Port A on cross port valve
				Port B - 1st spool	Port C on cross port valve
D	1	02108900	Hose ½" x 27	Outlet on 2-spool	Selector valve "OUT"
E	1	00869800	Hose 3/4" x 88	Port A - 2nd spool	1" side tube on bridge to tamper cyl
F	1	00872200	Hose 1" x 84	Port B - 2nd spool	1¼" side tube on bridge to tamper cyl
G	1	471565	Hose 1" x 29¼	Tank Port 2-spool	Selector valve "IN"

Directional Valve
Auto Tamp

Item	Qty	Part No.	Description
	1	62622600	Directional Valve Assembly w/fittings (Includes #1-7)
1	1	03464500	Directional Valve 2-Spool
2	3	00601500	Adapter 45° 1 1/16" MOR-1 1/16" JICM
3	2	62811500	Handle Assembly
4	1	00603100	Adapter 45° 1 1/16" MOR-1 5/16" JICM
5	2	03358900	Adapter 45° 7/8" MOR-1 1/16" JICM
6	2	03470200	Adapter 7/8" MOR-1 1/16" FOR
7	1	03487600	Adapter 90° ½" MOR- 9/16" JICM
8	1	469049	Adapter 90° 9/16" JICM- 9/16" JICF Sw

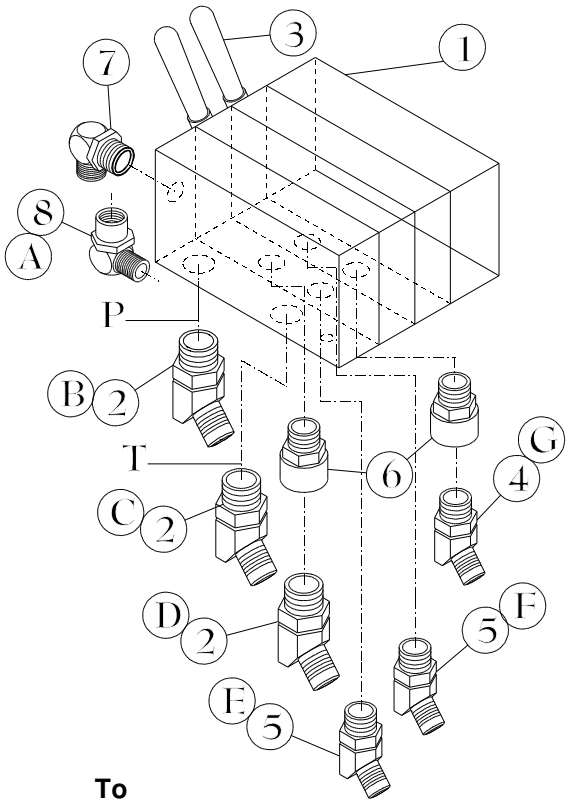

Hydraulic Hose and Routings

Item	Qty	Part No.	Description	From	To
A	1	468504	Hose 1/4" x 12	Adapter #8	Gauge on Dash
B	1	471565	Hose 1" x 29¼	"P" Pressure Port	Flow Control Valve
C	1	471565	Hose 1" x 29¼	"T" Outlet - 2 spool	Selector valve "OUT"
D	1	00553800	Hose 3/4" x 36	Port A - 1st spool	Port A on cross port valve
E	1	00553800	Hose 3/4" x 36	Port B - 1st spool	Port C on cross port valve
F	1	00869800	Hose 3/4" x 88	Port A - 2nd spool	1" side tube on bridge to tamper cyl
G	1	00872200	Hose 1" x 84	Port B - 2nd spool	1¼" side tube on bridge to tamper cyl

Selector Valve
Manual & Auto Tamp

Item	Qty	Part No.	Description
	1	62580600	Selector Valve with fittings
1	1	03384500	Adapter Tee 7/8" MOR x1 1/16"JICM-2
2	4	470898	Adapter Straight 3/4" MOR / 7/8" JICM
3	1	00542100	Adapter 45° 7/8" MOR x 7/8" JICM
4	1	03353000	Valve 2 Spool

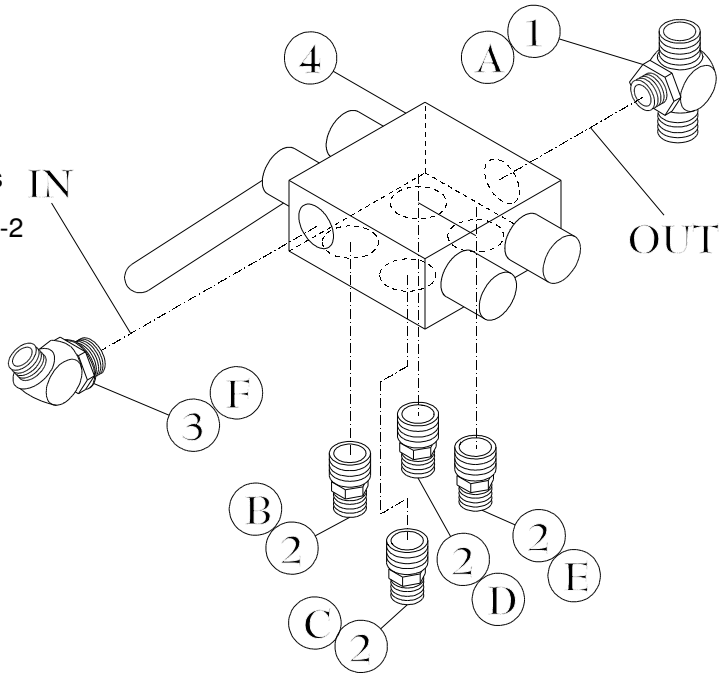

Hydraulic Hoses and Routings

Item	Qty	Part No.	Description	From	To	
A	1	471862	Hose 1" x 84	Selector valve “OUT”	Tank Filter	***(Intermediate)***
	1	471870	Hose 1" x 108	Selector valve “OUT”	Tank Filter	***(Stripper)***
B	1	02110500	Hose ½" x 65	Bottom RH front port	Top side tube -gate cylinder	***(Intermediate)***
	1	468512	Hose ½" x 84	Bottom RH front port	Top side tube -gate cylinder	***(Stripper)***
C	1	02110500	Hose ½" x 65	Bottom RH rear port	Bottom side tube-gate cyl	***(Intermediate)***
	1	468512	Hose ½" x 84	Bottom RH rear port	Bottom side tube -gate cylinder	***(Stripper)***
D	1	02110500	Hose ½" x 65	Bottom LH front port	Bottom wheel cylinder tube	***(Intermediate)***
	1	471623	Hose ½" x 74	Bottom LH front port	Bottom wheel cylinder tube	***(Stripper)***
E	1	02110500	Hose ½" x 65	Bottom LH rear port	Top wheel cylinder tube	***(Intermediate)***
	1	471623	Hose ½" x 74	Bottom LH rear port	Top wheel cylinder tube	***(Stripper)***
F	1	02108900	Hose ½" x 27	Selector valve “IN”	Outlet on 2-spool	

Cross Port Relief Valve
Manual & Auto Tamp

Item	Qty	Part No.	Description
	1	60731700	Cross Port Relief Valve Assembly
1	1	00582700	Cross Port Relief Valve
2	4	00590000	Adapter Straight 1 1/16 MOR-1 1/16 JICM

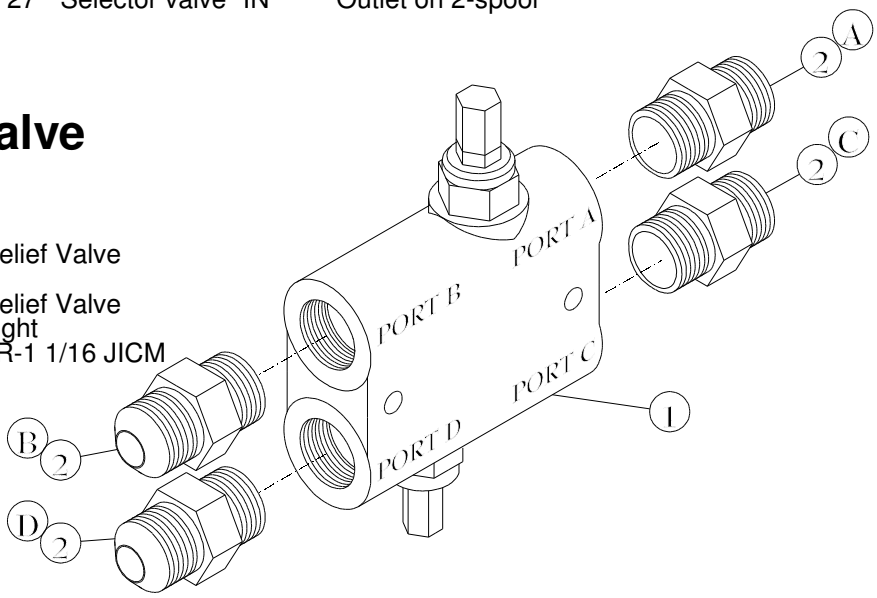

Hydraulic Hoses and Routings

Item	Qty	Part No.	Description	From	To	
A	1	00553800	Hose 3/4" x 38	Port A-1st spool	Port A on cross port on 2-spool	
B	1	00550400	Hose 3/4" x 48	Port B on cross port	Port A bridge motor	**Chain Drive**
					Top tube bridge motor	**Chainless**
C	1	00553800	Hose 3/4" x 38	Port B-1st spool	Port C cross port	
D	1	00550400	Hose 3/4" x 48	Port D on cross port	Port B bridge motor	**Chain Drive**
					Bottom tube bridge motor	**Chainless**

Selector Valve
Auto Tamper

Item	Qty	Part No.	Description
		62857800	3 Way Valve Assembly
1	1	03819000	Flow Control Valve
2	1	00603100	Adapter 45° 1 1/16" MOR -1 5/16 JICM
3	1	01435700	Adapter Straight 1 1/16" MOR -3/4" FOR
4	1	03366200	Adapter 90° 3/4" MOR -7/8" JICM
5	1	00607200	Adapter 90° 1 1/16" MOR -1 1/16 JICM
6	1	00562900	Adapter 90° 1 1/16" JICFSw-1 1/16JICM

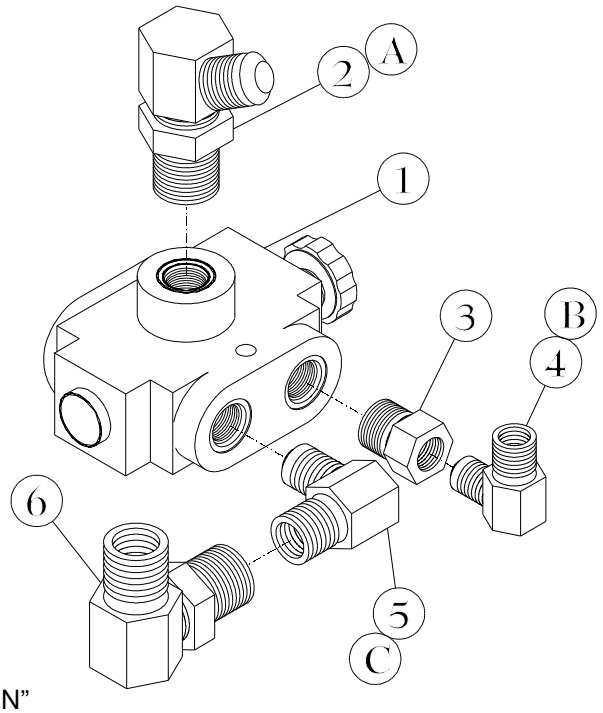

Hydraulic Hoses and Routings

Item	Qty	Part No.	Description	To
A	1	472993	Hose 1" x 74	Pump
B	1	02108900	Hose ½" x 27	Selector Valve “IN”
C	1	471565	Hose 1" x 29¼	“P” Pressure Port -2 spool

PTO Pump

Item	Qty	Part No.	Description
	1	62814900	Pump Assy w/ fittings & torque arm (Items 1-6)
1	1	03572500	PTO Pump
		00772400	Seal Kit
2	1	00704700	Adapter Straight 1 5/16 MOR/ 1 5/16 JICM
3	1	03804200	Adapter Straight 1 5/8" MOR/ 2" Hose Barb
4	1	10904100	Torque Arm
5	2	330142	Washer ½" Lock
6	2	01147800	HHCS ½" x 1½"
7	1	82551300	Pump Mount Bracket
8	1	330449	Pin 3/4" x 4½"
9	1	330456	Klik Pin 7/16"

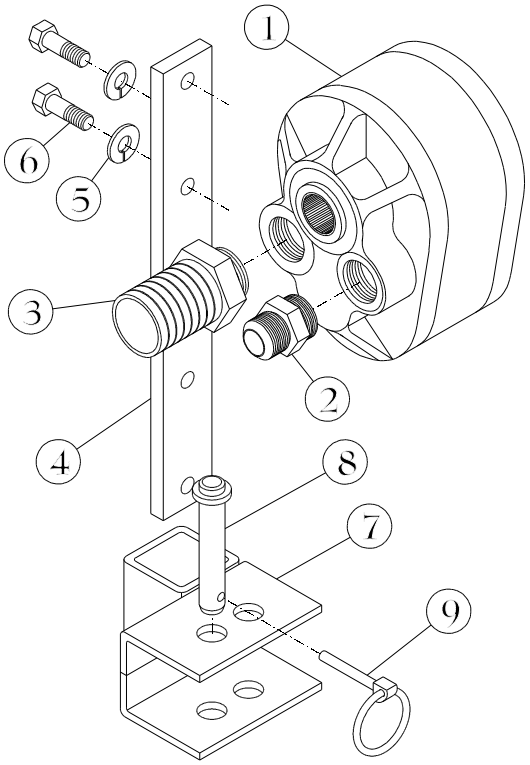

Oil Reservoir
Manual Tamper

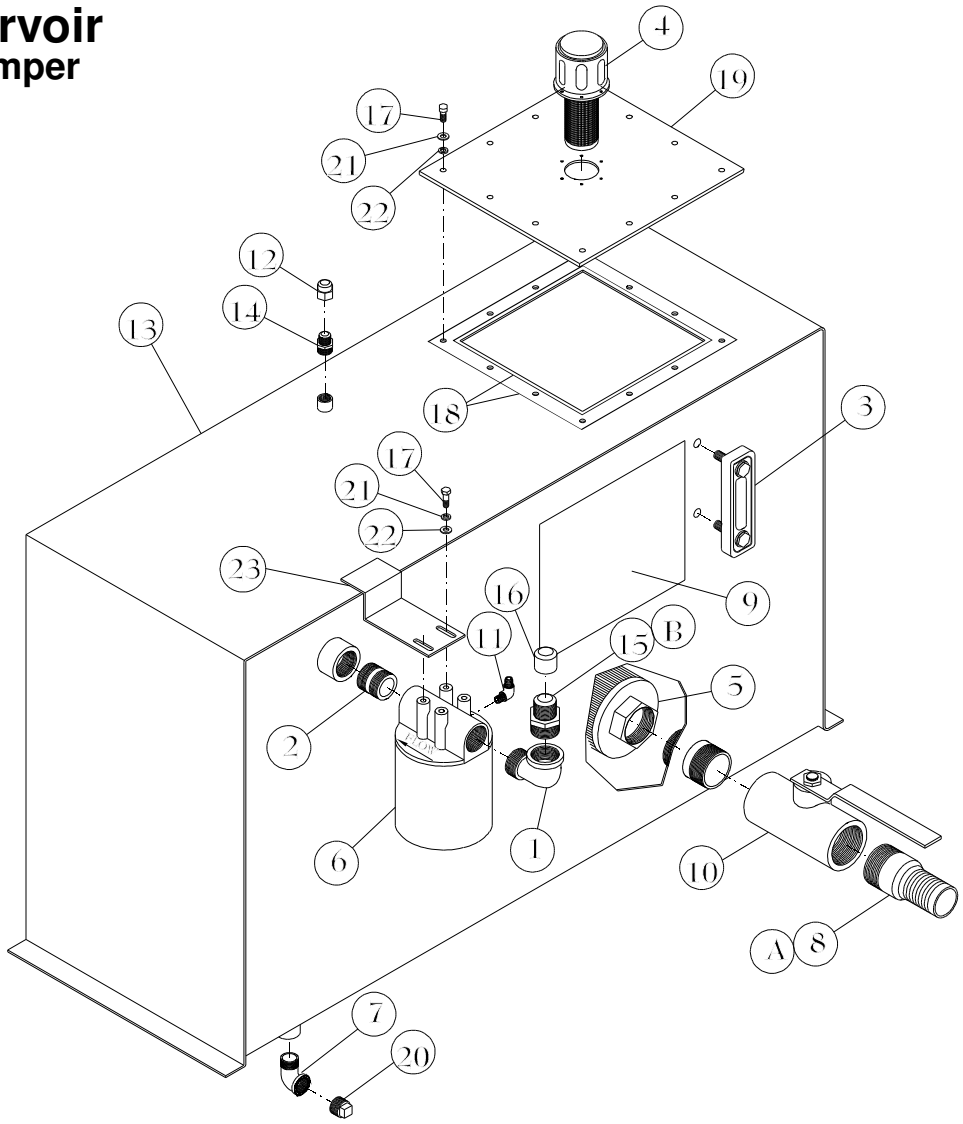

Item	Qty	Part No.	Description
	1	62813100	Oil Reservoir Assembly
1	1	00130500	Pipe Street El 1 1/4"
2	1	00140400	Pipe Close Nipple 1 1/4"
3	1	00145300	Sight Level & Temp Gauge
4	1	00146100	Filler/Breather Assembly
5	1	03798600	Suction Strainer 2" Pipe
6	1	00148700	Complete Filter & Mount
	1	00676700	10 Micron Filter Only
7	1	06325500	Pipe Street El 3/4"
8	1	03801800	Combo Nipple 2" NPTM x 2" Hose
9	1	03553500	Decal Instructions
10	1	03800000	Ball Valve 2" NPTF -2" Barb
11	1	03810900	Adapter 90D 7/16 JICM / 1/8 NPTF

Item	Qty	Part No.	Description
12	1	00866400	Adapter Cap 9/16"-18 JIC
13	1	82536400	Oil Reservoir 90 Ga
14	1	00568600	Adapter Straight 3/8" NPTM / 9/16" JICM
15	1	00827600	Adapter Straight 1 1/4 NPTM/ 1 5/16 JICM
16	1	00867200	Plastic Cap 1 1/16"-12
17	14	01010800	HHCS 5/16" x 1"
18	9'	06490700	Caulking rope
19	1	10454700	Clean out cover
20	1	461962	Pipe Plug 3/4" NPTM
21	14	330852	Flat Washer 5/16"
22	14	330845	Lock Washer 5/16"
23	1	20704300	Filter Stabilizer

Hydraulic Hoses and Routings

Item	Qty	Part No.	Description				From	To
A	1	03802600	Return Hose	2"	x	74	Hose barb	Suction side of pump
B							Filter fitting on reservoir	Tank port on 2-spool valve
	1	473033	Hyd Hose	1"	x	60	***(Intermediate)***	
	1	471862	Hyd Hose	1"	x	84	***(Stripper)***	

NOTE: Hydraulic oil capacity (including purging) requires approximately 90 gallons. Refer to lubrication and maintenance requirements on *pages 12 - 14.*

Oil Reservoir
Auto Tamper

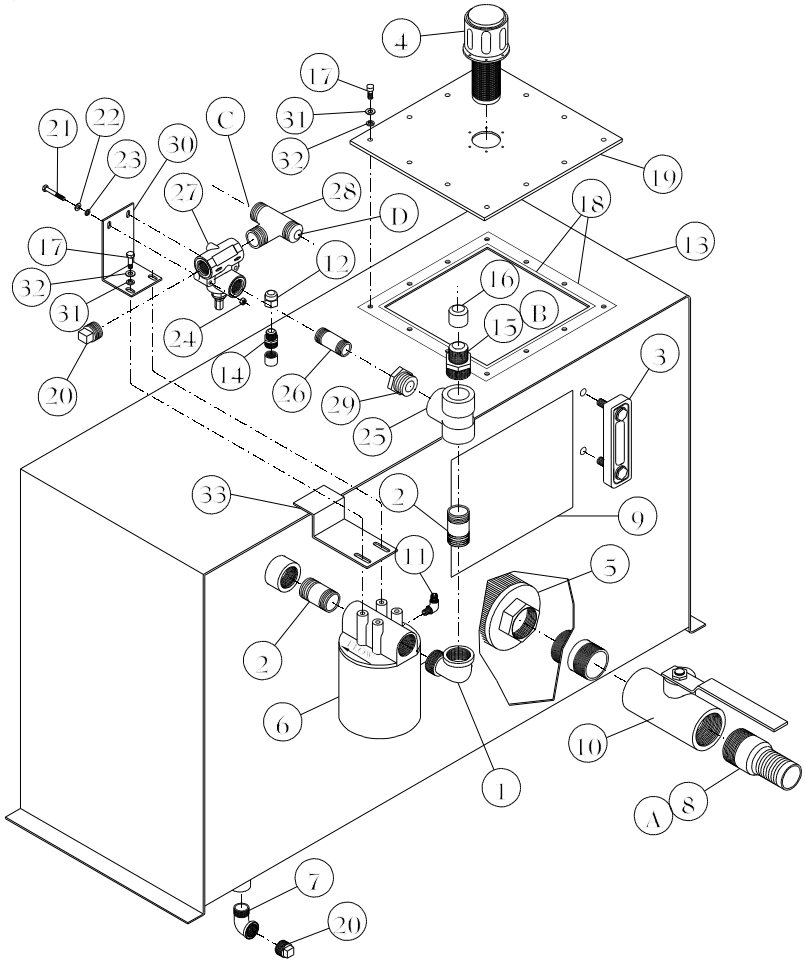

Item	Qty	Part No.	Description
	1	62812300	Oil Reservoir Assembly
1	1	00130500	Pipe Street El 1 1/4"
2	2	00140400	Pipe Close Nipple 1 1/4"
3	1	00145300	Sight Level & Temp Gauge
4	1	00146100	Filler/Breather Assembly
5	1	03798600	Suction Strainer 2" Pipe
6	1	00148700	Complete Filter & Mount
	1	00676700	10 Micron Filter Only
7	1	06325500	Pipe Street El 3/4"
8	1	03801800	Combo Nipple 2" NPTM x 2" Hose
9	1	03553500	Decal Instructions
10	1	03800000	Ball Valve 2" NPTF -2" Barb
11	1	03810900	Adapter 90D 7/16 JICM / 1/8 NPTF
12	1	00866400	Adapter Cap 9/16"-18 JIC
13	1	82536400	Oil Reservoir 90 Ga
14	1	00568600	Adapter Straight 3/8" NPTM / 9/16" JICM

Item	Qty	Part No.	Description
15	1	00827600	Adapter Straight 1 1/4 NPTM/ 1 5/16 JICM
16	1	00867200	Plastic Cap 1 1/16"-12
17	14	01010800	HHCS 5/16" x 1"
18	9'	06490700	Caulking rope
19	1	10454700	Clean out cover
20	2	461962	Pipe Plug 3/4" NPTM
21	2	335133	HHCS 1/4" x 1 3/4"
22	2	02016400	Flat Washer 1/4"
23	2	330050	Lock Washer 1/4"
24	2	332205	Hex Nut 1/4"
25	1	00642900	Pipe Tee 1 1/4"
26	1	03546900	Pipe Nipple 3/4" x 2"
27	1	03547700	Relief Valve
28	1	03548500	Adapter Tee 1 5/16"JICM-2 x3/4"NPTM
29	1	03551900	Pipe Bushing 1/4" x 3/4"
30	1	18386300	Filter Mount
31	14	330852	Flat Washer 5/16"
32	14	330845	Lock Washer 5/16"
33	1	20704300	Filter Stabilizer

Hydraulic Hoses and Routings

Item	Qty	Part No.	Description				From	To
A	1	03802600	Return Hose	2"	x	74	Hose barb	Suction side of pump
B							Filter on reservoir	Tank port on 2-spool valve
	1	473033	Hyd Hose	1"	x	60	***(Intermediate)***	
	1	473009	Hyd Hose	1"	x	74	***(Stripper)***	
C	1	472993	Hyd Hose	1"	x	74	Flow Control Valve	Tee - Relief Valve
D	1	00872200	Hyd Hose	1"	x	84	Tee - Relief Valve	Pump

NOTE: Hydraulic oil capacity (including purging) requires approximately 90 gallons. Refer to lubrication and maintenance requirements on *pages 12 - 14.*

Bridge Assembly
Chain Drive

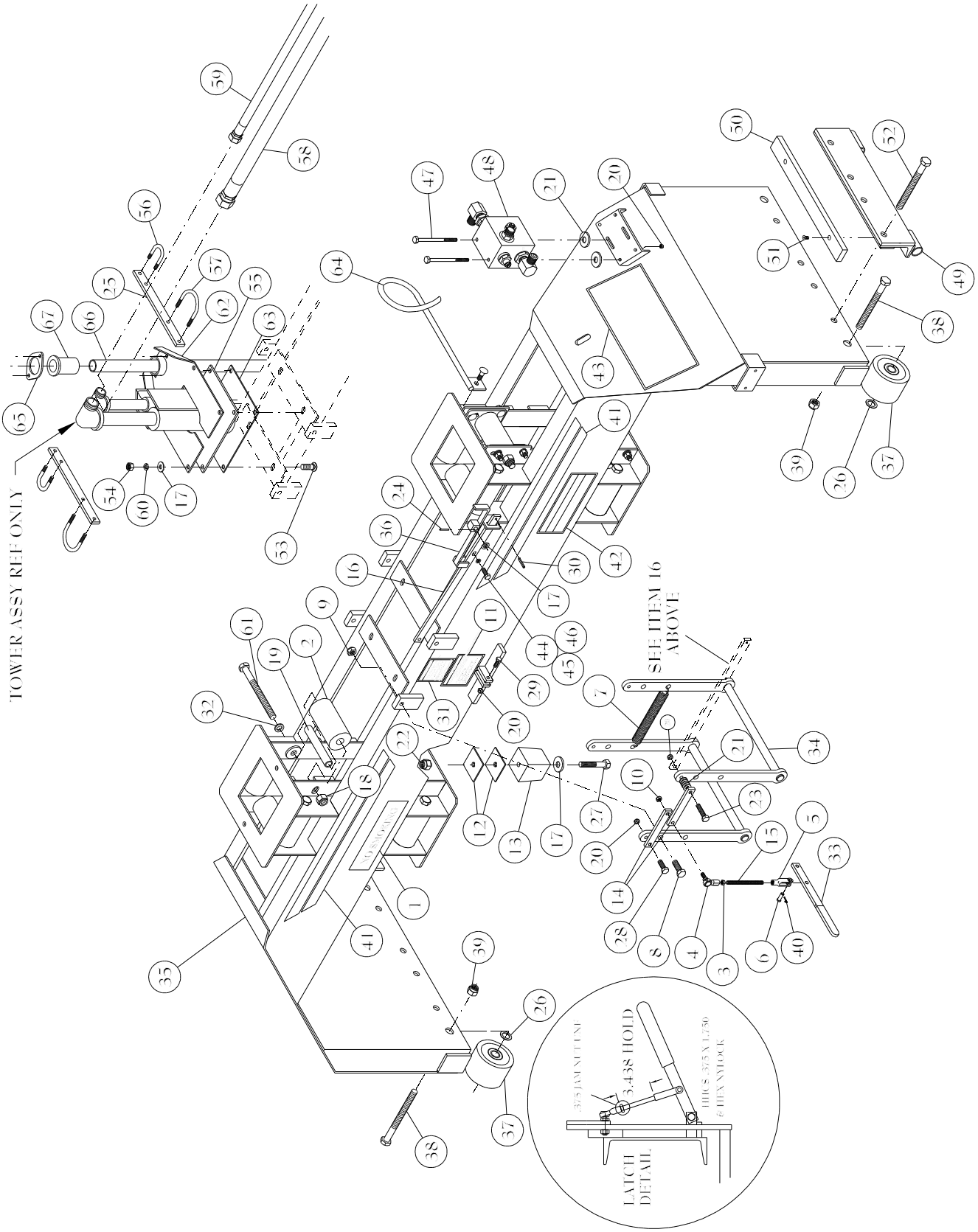

Bridge Assembly
Chain Drive

Item	Qty	Part No.	Description
1	1	00167700	Decal No Smoking 3 x 12
2	16	00190900	Roller Plastic 3 x 1 x 5 7/8"
3	1	00504100	Nut .375 Hex Jam SAE
4	1	00524900	Tie Rod End 3/8-24 /3/8 M
5	1	00525600	Yoke End 3/8"-24
6	1	00526400	Yoke Pin 3/8" x 1 1/16"
7	1	00687400	Spring 1 1/8 x 8½ x.148wire
8	4	01071000	HHCS 5/8" x 2"
9	4	01572700	Nut 5/8" Hex Nylock
10	1	03716800	Nut 3/8" Hex Nylock Jam SAE
11	1	00172700	Decal Spanish Lock
12	4	10530400	Bumper Shim 10ga x 3 x 3
13	2	10746600	Dock Bumper 3½" x3½" x3"
14	2	11850500	Latch Linkage
15	1	11854700	All Thread 3/8"-24 x 5 3/8"
16	1	12014700	Safety Linkage
17	8	330159	Washer ½" Flat
18	16	330316	Nut 3/4" Hex Nylock
19	16	10521300	Roller Bushing
20	5	330837	Nut 3/8" Hex Nylock
21	7	330894	Washer 3/8" Flat
22	2	331363	Nut ½" Hex Nylock
23	1	331884	HHCS 3/8" x 2½"
24	1	332452	Roll Pin 5/32" x 1 1/4"
25	2	20524500	U-Bolt Strap
26	4	335026	Machine Bushing 1½" OD x 1" ID x 14 ga
27	2	334300	HHCS ½" x 3½"
28	1	335703	HHCS 3/8" x 1½"
29	1	335877	HHCS 3/8" x 1 3/4"
30	1	336057	Roll Pin 1/4" x 1 ½"
31	1	00171900	Decal Warning Lock
32	32	02176600	Flat Washer 3/4" SAE
33	1	60767100	Handle Assy Manual Latch
34	2	80107600	Latch
35	1	82582800	Bridge Chain Drive
36	1	80367600	Locking Arm
37	4	03823200	Roller 5" OD x 1" ID x 3 1/4"
38	4	330357	HHCS 1" x 5½"
39	4	330597	Nut 1" Hex
40	1	337071	Cotter Pin 3/32" x ½"
41	2	13421300	Decal Striping
42	1	02789600	Decal 1300 RPM
43	2	02747400	Decal Chain Adjustment
44	1	01010800	HHCS 5/16" x 1"
45	2	330852	Washer 5/16" Flat
46	1	331611	Nut 5/16" Nylock
47	2	334961	HHCS 3/8" x 6"
48	1	62758800	Regen Valve Assembly
49	2	80488000	Bridge Retainer
50	2	14034300	Pad
51	6	02886000	Screw 5/16x3/4 Hex Socket
52	8	334284	HHCS 3/4" x 6½"
53	4	01212000	Carriage Bolt ½" x 1½"
54	4	330134	Nut ½" Hex
55	1	18357400	Tower Guide Bracket
56	2	338111	U-Bolt 3/8" x 1½"
57	2	03735800	U-Bolt 3/8" x 3"
58	1	00548800	Hose 1" x 140" 1 5/16" JICF Swivels
59	1	00545400	Hose 3/4" x 140" 1 1/16" JICF Swivels
60	4	330142	Washer ½" Lock
61	16	334219	HHCS 3/4" x 8½"
62	1	82498700	Cylinder Guide
63	1	18397000	Tower Guide Spacer
64	1	82403700	Hose Carrier
65	1	20523700	Bushing Plate
66	1	82496100	Cylinder Tower
67	1	403675	Nylon Bushing
**	2	61008900	Includes #49, 50, & 51

Regen Valve Assembly
#62758800

Item	Qty	Part No.	Description
1	1	03732500	Regen Valve 12222A
		03744000	Counterbalance Cartridge
		03793700	Seal Kit
		03745700	Pilot To Open Valve
		03794500	Seal Kit
		03746500	Pilot To Close Valve
		03793700	Seal Kit
2	2	00750000	Adapter Straight 1 5/16" MOR x 1 1/16" JICM
3	2	00634600	Adapter 90° 1 5/16" MOR x 1 5/16" JICM

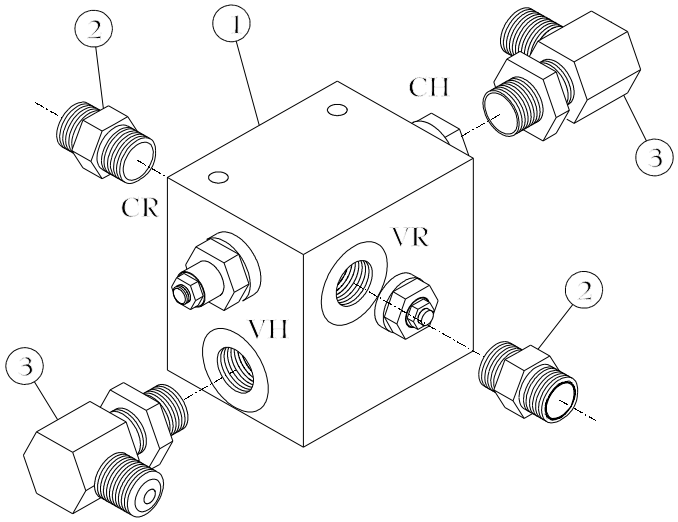

Bridge Assembly
Chainless

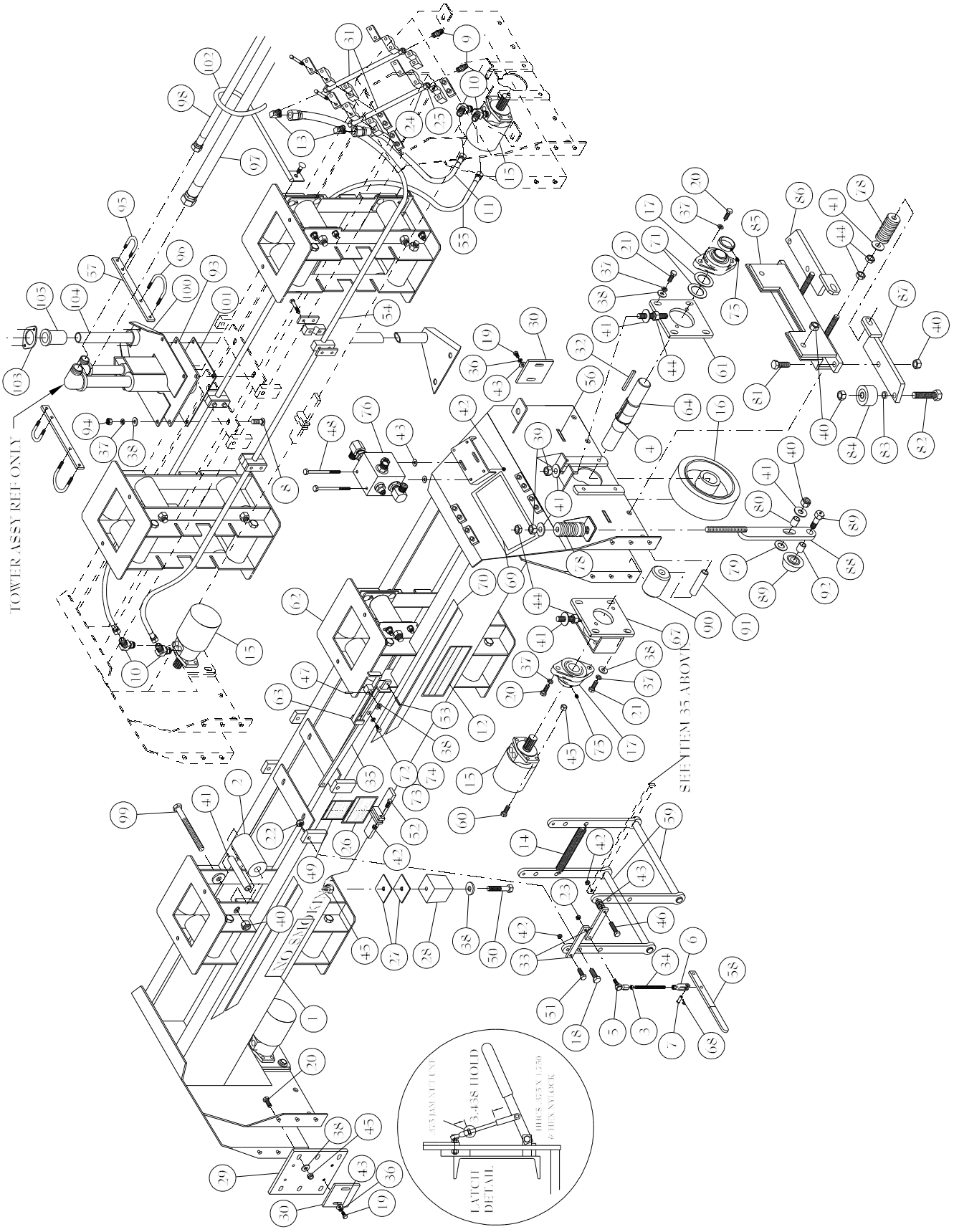

Bridge Assembly
Chainless

Item	Qty	Part No.	Description
1	1	00167700	Decal No Smoking 3 x 12
2	16	00190900	Roller Plastic 3 x 1 x 5 7/8"
3	1	00504100	Nut 3/8" Hex Jam SAE
4	4	00915900	External Snap Ring 2 1/4"
5	1	00524900	Tie Rod End 3/8"-24 /3/8" M
6	1	00525600	Yoke End 3/8"-24
7	1	00526400	Yoke Pin 3/8" x 1 1/16"
8	4	01212000	Carriage Bolt ½" x 1 ½"
9	2	00541300	Adapter Straight 1 5/16 JICM/ 1 1/16" JICM
10	4	00542100	Adapter 45° 7/8" MOR / 7/8" JICM
11	1	02121200	Hose ½" x 27" 7/8 JICFSw/1 1/16JICFSw
12	1	02789600	Decal 1300 RPM
13	2	00619700	Adapter 90° 1 5/16 JICM / 1 1/16 JICM
14	1	00687400	Spring 1 1/8 x 8½ x.148wire
15	2	472027	Hydraulic Motor
16	2	02124600	Wheel 10 x 4 x 2 1/4" bore
17	4	402685	Bearing 2" 2 Bolt
18	4	01071000	HHCS 5/8" x 2"
19	8	01017300	HHCS 3/8" x 1"
20	20	01147800	HHCS ½" x 1½"
21	16	01180900	HHCS ½" x 1 1/4"
22	4	01572700	Nut 5/8" Hex Nylock
23	1	03716800	Nut 3/8" Nylock Jam SAE
24	4	02097400	Adapter Tube Sleeve 1" Tube
25	4	02100600	Adapter Tube Nut 1" Tube
26	1	00172700	Decal Spanish Lock
27	4	10530400	Bumper Shim 10ga x 3 x 3
28	2	10746600	Dock Bumper 3½" x3½" x3"
29	2	11721800	Front End Plate
30	4	11724200	Scraper 3/8" x 4½" x 4½"
31	2	11801800	Hydraulic Tube 1" x 16"
32	2	20072500	Key 3/8" x 2"
33	2	11850500	Latch Linkage
34	1	11854700	All Thread 3/8"-24 x 5 3/8"
35	1	12014700	Safety Linkage
36	8	330043	Washer 3/8" Lock
37	24	330142	Washer ½" Lock
38	32	330159	Washer ½" Flat
39	8	330290	Nut 3/4" Hex
40	24	330316	Nut 3/4" Hex Nylock
41	16	10521300	Roller Bushing
42	5	330837	Nut 3/8" Hex Nylock
43	15	330894	Washer 3/8" Flat
44	16	330985	Nut 3/4" Jam
45	22	331363	Nut ½" Hex Nylock
46	1	331884	HHCS 3/8" x 2½" G5
47	1	332452	Roll Pin 5/32" x 1 1/4"
48	2	334961	HHCS 3/8" x 6"
49	1	00171900	Decal Warning Lock
50	2	334300	HHCS ½" x 3½" G5
51	1	335703	HHCS 3/8"x 1½" G5
52	1	335877	HHCS 3/8" x 1 3/4" G5
53	1	336057	Roll Pin 1/4" x 1 ½"
54	1	02123800	Hose ½" x 120" 7/8 JICFSw/1 1/16JICFSw
55	1	02122000	Hose ½" x 120" 7/8 JICF Sw/ 7/8 JICF Sw
56	4	600817	Decal Grease Daily
57	2	20524500	U-Bolt Strap
58	1	60767100	Handle Assy Manual Latch
59	2	80107600	Latch
60	8	335240	HHCS ½" x 1 3/4"
61	2	80556400	Bearing Mount
62	1	80320500	Bridge
63	1	80367600	Locking Arm
64	2	13420500	Drive Shaft Assembly
65	3	00867200	Plastic Cap 1 1/16"-12
66	1	00901900	Plastic Cap 1 5/16"-12
67	2	80985500	Motor / Bearing Mount
68	1	337071	Cotter Pin 3/32" x 1/2"
69	2	02742500	Decal Chainless Adjust.
70	2	13421300	Decal Striping
71	AR	335232	Machine Bushing 3" OD x 2" ID x 14 ga
72	1	01010800	HHCS 5/16" x 1"
73	2	330852	Washer 5/16" Flat
74	1	331611	Nut 5/16" Nylock
75	4	337022	Set Screw 3/8"-24 x 3/8" Cone Point
76	1	62758800	Regen Valve Assembly
77	32	02176600	Washer 3/4" Flat SAE
78	8	00502500	Spring 2" OD x 2½"
79	4	335786	Washer 1" Flat SAE
80	4	02126100	Bushing 1 1/32" x 1 13/64"
81	4	335174	HHCS 3/4" x 2½"
82	4	01110600	HHCS 3/4" x 4"
83	4	331694	Bushing 1 1/4 OD x 10ga x 3/4
84	4	60967700	Outside Roller Assembly
85	2	80558000	Outside Retainer
86	2	80560600	Side Roller Adjustment
87	2	80559800	Side Roller Adjustment
88	4	80561400	Roller Mount
89	4	02127900	Wheel 3 1/4" w/bolt
90	4	00500900	Roller 3" x 1.055 x 4"
91	4	11720000	Tube 1.050 x 4 3/8"
92	4	12587200	Bushing 1 1/8" x 7/8"
93	1	18357400	Tower Guide
94	4	330134	Nut ½" Hex
95	2	338111	U-Bolt 3/8" x 1½"
96	2	03735800	U-Bolt 3/8" x 3"
97	1	00548800	Hose 1" x 140" 1 5/16" JICF Swivels
98	1	00545400	Hose 3/4" x 140" 1 1/16" JICF Swivels
99	16	334219	HHCS 3/4" x 8½"
100	1	82498700	Cylinder Guide
101	1	18397000	Tower Guide Spacer
102	1	82403700	Hose Carrier
103	1	20523700	Bushing Plate
104	1	82496100	Cylinder Tower
105	1	403675	Nylon Bushing
**	4	61172300	Tension Arm Assembly Includes #88, 89, 92
**	2	61171500	Outside Retainer Assembly Includes #39 - 41, 44, 78, 81, 82 - 87

Front Drive Components

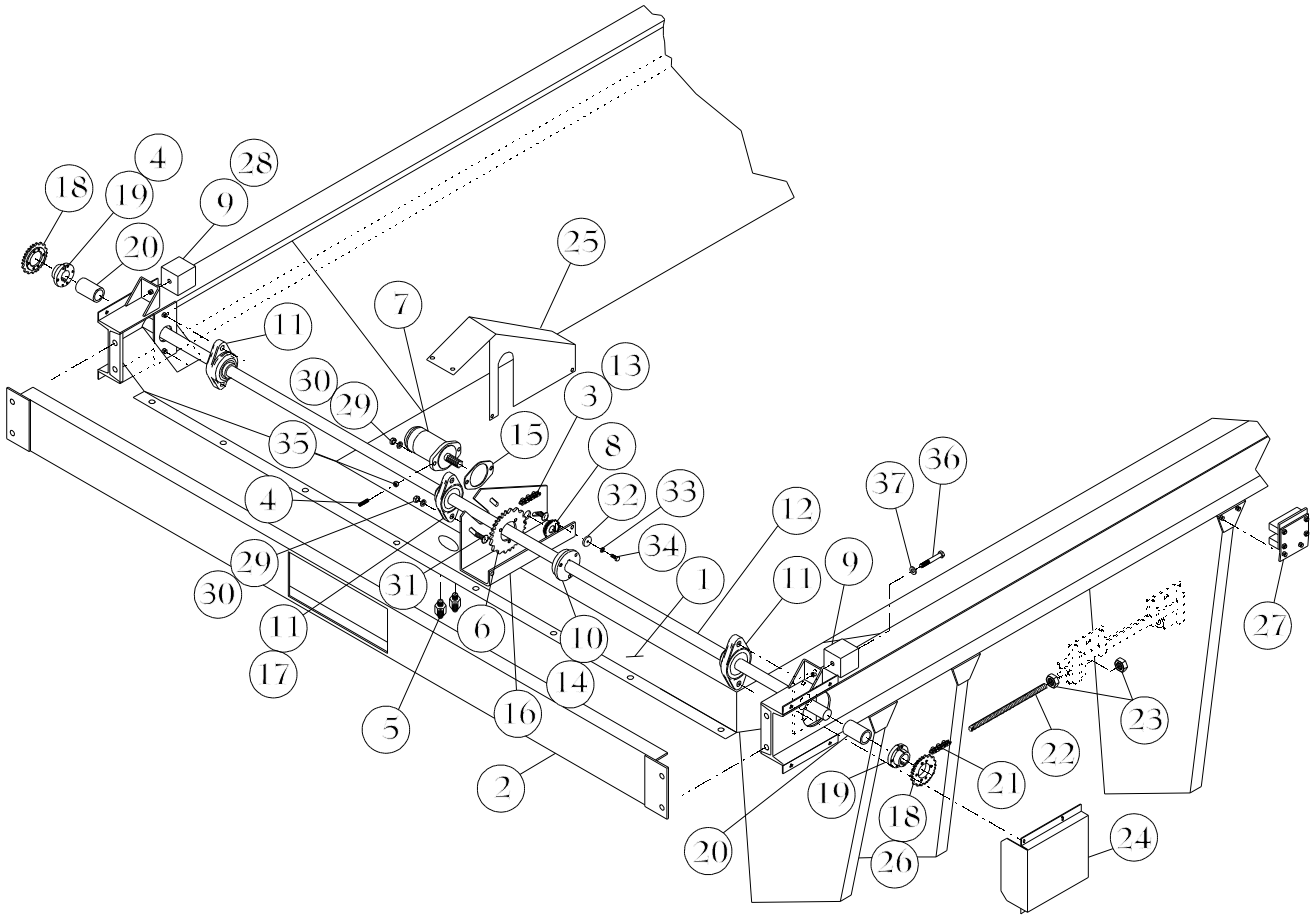

Item	Qty	Part No.	Description
1	1	11864600	Front Hopper **Chain Drive** ***(Intermediate Only)***
	1	11488400	Front Hopper **Chainless** ***(Intermediate Only)***
2	1	80187800	Front Channel ***(Intermediate Only)***
3	1	00232900	Chain #80 Conn Link
4	2	00462200	Set Screw 3/8" x 1½"
5	2	03358900	Adapter 90° 7/8 MOR / 1 1/16 JICM
6	1	00695700	Sprocket #80 20 Tooth SF
7	1	472076	Hyd Motor 1 - 6 Spline
		472381	Hyd Motor Seal Kit
8	1	80983000	Sprocket 80 11T 1-6 Spline
9	2	10746600	Rail Bumper
10	1	00730200	Bushing 1½" SF QD
11	3	12911400	Bearing 1½" 2B -3/8-16hole
12	1	10626000	CRR 1½" x 124 Front Shaft
13	1	10903300	Chain #80 x 31Pitches
14	1	20072500	Key 3/8" x 2"
15	1	255224	Motor Spacer Plate
16	1	80348600	Drive Mount
17	3	00683300	Set Screw 3/8" x ½"

Item	Qty	Part No.	Description
18	2	01303700	Sprkt #80 15 Tooth SK
19	2	04418000	Bushing 1½" SK QD
20	2	12781100	Front Shaft Spacer
21	2	03498300	Chain Assy #80 x 773 P
22	4	10498400	All Thread 1"-8 x 9"
23	8	330381	Nut 1"-8 Hex
24	2	60996600	Front Chain Guard
25	1	60997400	Drive Mount Guard Assy
26	2	19183300	Key 3/8" x 1½"
27	6	60748100	Chain Guide Assy
28	1	431288	Chain 3/8" x 14 Pitches
29	4	330134	Hex Nut ½"
30	4	330142	Lock Washer ½"
31	4	333484	Carriage Bolt ½" x 1 3/4"
32	1	12804100	Washer
33	1	330845	Lock Washer 5/16"
34	1	01010800	HHCS 5/16" x 1"
35	1	330035	Hex Nut 3/8"
36	2	334300	HHCS ½" x 3½"
37	2	330159	Flat Washer ½"
00550400			Hyd Hose 3/4" x 48 w/1 1/16" JICF Sw From motor to cross port

Rear Drive Components

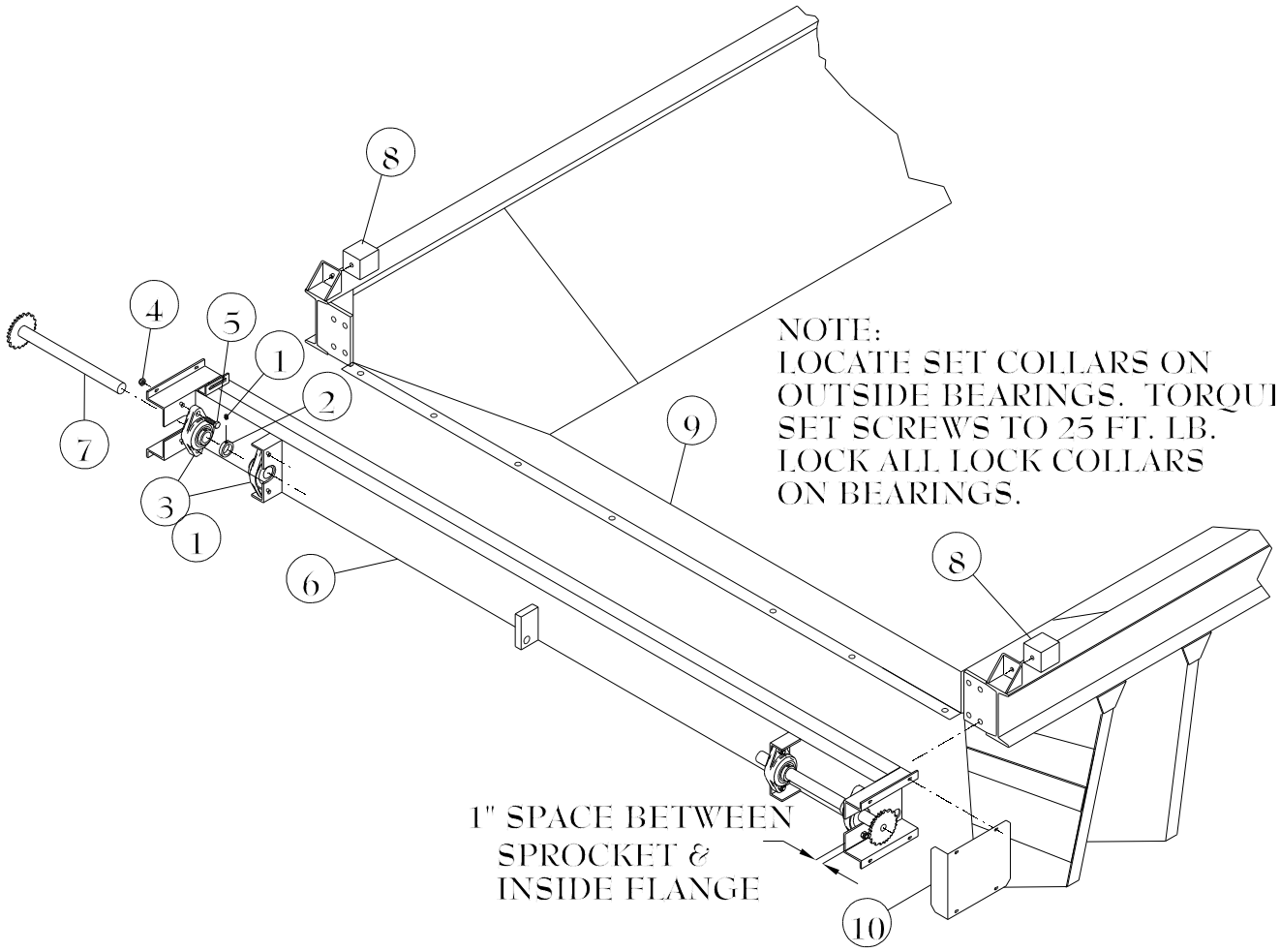

Item	Qty	Part No.	Description
1	2	00683300	Set Screw 3/8"-16 x ½" Cone point
2	2	00688200	Set Collar 1½" ID w/3/8"-16 SS
3	4	12911400	Bearing 1½"2B -3/8-16 hole
4	8	331363	Nut ½" Hex Nylock
5	8	335240	HHCS ½" x 1 1/4"
6	1	80970700	Rear Channel- **Chain Drive** ***(Intermediate Only)***
	1	80969900	Rear Channel- **Chainless** ***(Intermediate Only)***

Item	Qty	Part No.	Description
7	2	80093800	Rear Shaft
8	2	10746600	Bumper
9	1	80007800	Rear Hopper ***(Intermediate Only)***
10	2	60995800	Rear Chain Guard Assembly

Hydraulic Lines
Chain Drive

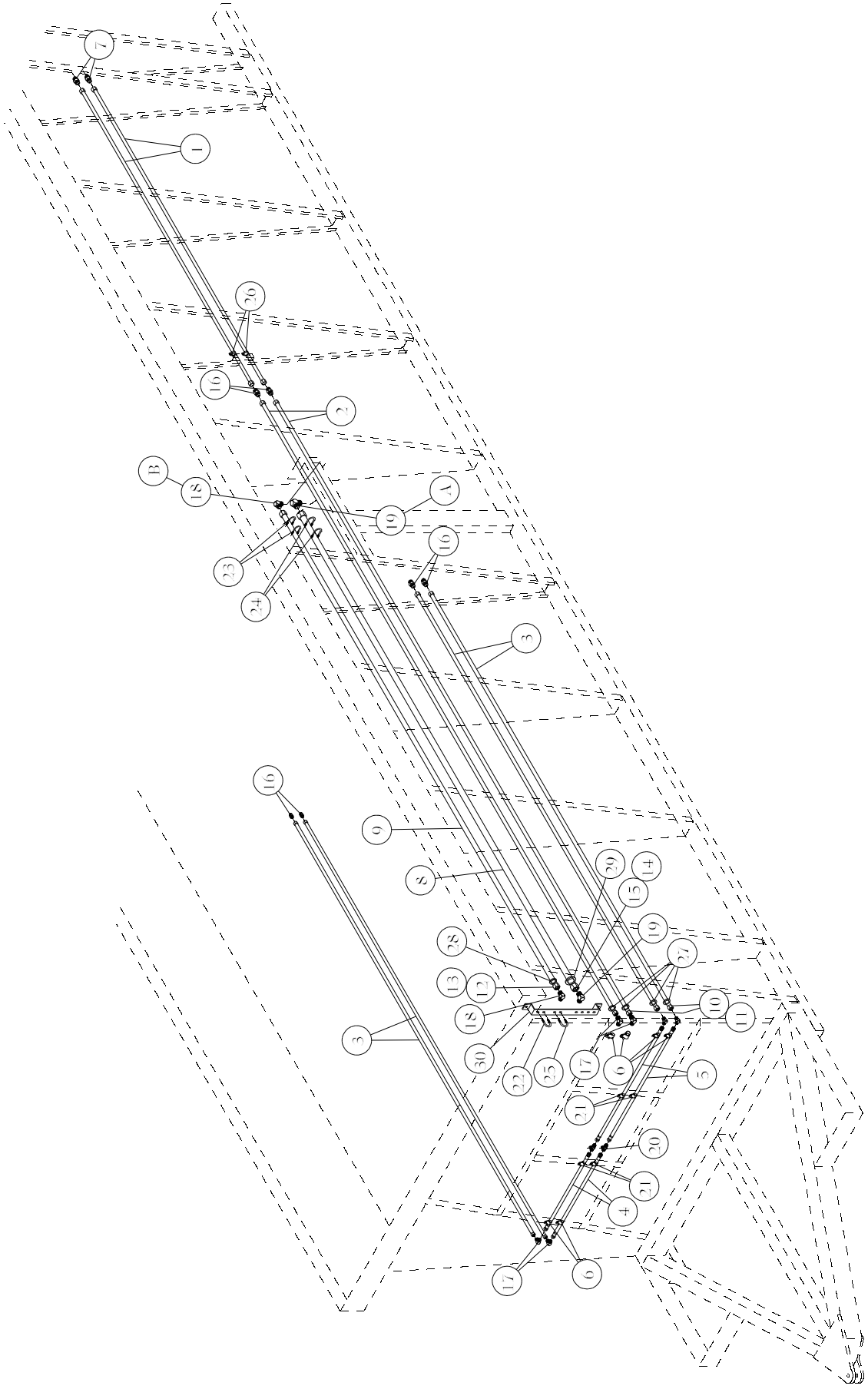

Hydraulic Lines
Chain Drive

Item	Qty	Part No.	Description
1	2	12541900	Hyd Tube 5/8" x 117"
2	2	02090900	Hyd Tube 5/8" x 240"
3	4	11655800	Hyd Tube 5/8" x 169"
4	2	02125300	Hyd Hose ½" x 29½" w/ 7/8" JICF Sw
5	2	02109700	Hyd Hose ½" x 54" w/ 7/8" JICF Sw
6	6	00723700	Hose Clamp 7/8" (Outside Wheel Clamp)
7	2	02866200	Adapter Straight 7/8" JICM/ 3/4" JICM
8	1	11662400	Hyd Tube 1 1/4" x 186"
9		***(Intermediate)***	
	1	11659000	Hyd Tube 1" x 188"
		(Stripper)	
	1	11661600	Hyd Tube 1" x 182"
10	16	02099000	Adapter Tube Nut 5/8"
11	16	02096600	Adapter Tube Sleeve 5/8"
12	2	02100600	Adapter Tube Nut 1"
13	2	02097400	Adapter Tube Sleeve 1"
14	2	02101400	Adapter Tube Nut 1 1/4"
15	2	02098200	Adapter Tube Sleeve 1 1/4"
16	6	00615500	Adapter Straight 7/8" JICM/ 7/8" JICM
17	6	00618900	Adapter 90° 7/8" JICM/ 7/8" JICM
18	2	00619700	Adapter 90° 1 5/16"JICM/ 1 1/16"JICM
19	2	00540500	Adapter 90° 1 5/8" JICM/ 1 5/16" JICM
20	2	00614800	Adapter Tee 7/8" JICM
21	4	00722900	Hose Clamp 3/4"
22	1	333906	U-bolt 3/8" x 1 3/4"
23	2	02196400	U-bolt 3/8"-16 x 1 x 2
24	2	01034800	U-bolt 3/8"-16 x1 1/4 x2 1/4
25	1	338111	U-bolt 3/8" x 1½"
26	2	00613000	Hose Clamp 5/8"
27	38	02093300	Grommet 3/4"ID x 1 5/8" OD
28	5	02094100	Grommet 1" ID x 1 3/4" OD
29	5	02095800	Grommet 1 5/16" ID x 2" OD
30		***(Intermediate)***	
	1	20516100	Hose Clamp Bracket
		(Stripper)	
	1	20517900	Hose Clamp Bracket

Hydraulic Hoses

(Intermediate)			
A	1	62855200	Hyd Hose 1" x 252" w/1 5/16" JICF Swivel
B	1	62854500	Hyd Hose 3/4" x 252 " w/1 1/16" JICF Swivel
(Stripper)			
A	1	62853700	Hyd Hose 1" x 272" w/1 5/16" JICF Swivel
B	1	62852900	Hyd Hose 3/4" x 272 " w/1 1/16" JICF Swivel
		03627700	Hose Sleeve for 3/4" hose
		03628500	Hose Sleeve for 1" hose

Tube Fitting Assembly

1. Clean all dirt and grit from the I.D. and O.D.
2. Slide the nut and then the ferrule onto the tube. Make sure the tapered end of ferrule points toward the nut.

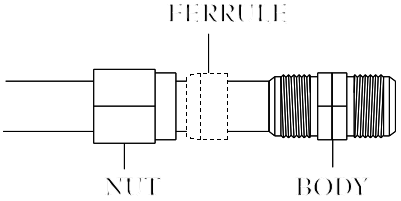

3. Lubricate all mating surfaces of nut, ferrule and body with a heavy lubricant such as Aeroquip Lube Oil.
4. Place end of tube against standard S.A.E. 37° flare body.
5. Slide the ferrule and nut against body and tighten the nut onto the body "hand tight." Mark the nut in relation to the body for location.

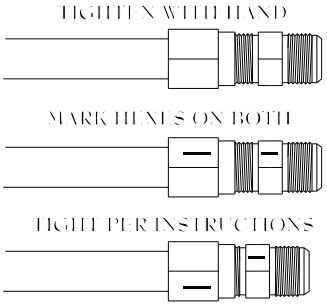

6. Hold tube against body and tighten nut as follows:
   a. 1 1/4 turns on -3 (3/16") through -10 (5/8").
   b. 1 1/2 turns on -12 (3/4") through -32 (2").

Hydraulic Lines
Chainless

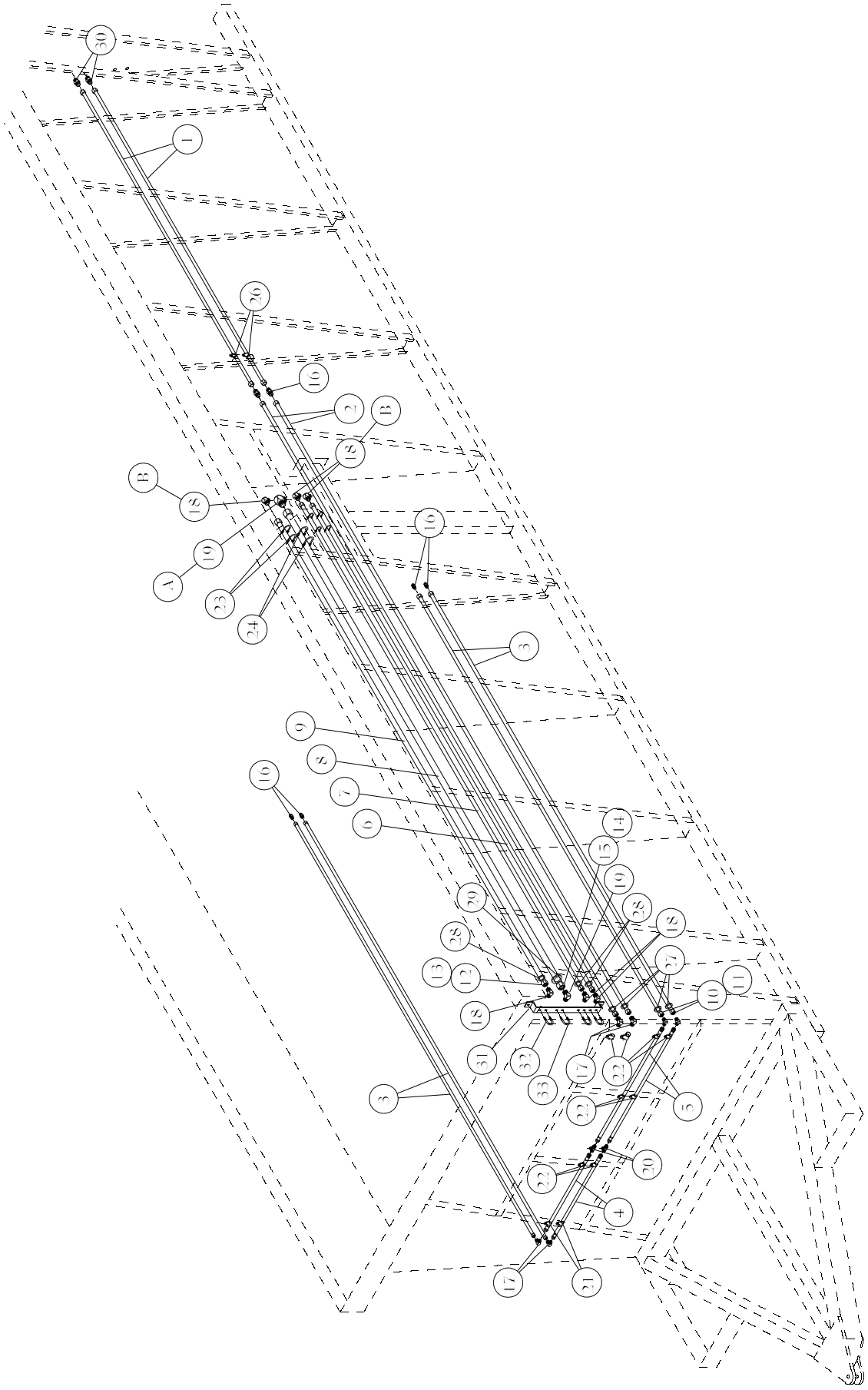

Hydraulic Lines
Chainless

Item	Qty	Part No.	Description
1	2	12541900	Hyd Tube 5/8" x 117"
2	2	02090900	Hyd Tube 5/8" x 240"
3	4	11655800	Hyd Tube 5/8" x 169"
4	2	02125300	Hyd Hose ½" x 29½" w/ 7/8" JICF Sw
5	2	02109700	Hyd Hose ½" x 54" w/ 7/8" JICF Sw
6		***(Intermediate)***	
	1	11660800	Hyd Tube 1" x 180 1/4"
		(Stripper)	
	1	12671400	Hyd Tube 1" x 194"
7	1	11661600	Hyd Tube 1" x 182"
8	1	11662400	Hyd Tube 1 1/4" x 186"
9		***(Intermediate)***	
	1	11659000	Hyd Tube 1" x 188"
		(Stripper)	
	1	12670600	Hyd Tube 1" x 190"
10	16	02099000	Adapter Tube Nut 5/8"
11	16	02096600	Adapter Tube Sleeve 5/8"
12	2	02100600	Adapter Tube Nut 1"
13	2	02097400	Adapter Tube Sleeve 1"
14	2	02101400	Adapter Tube Nut 1 1/4"
15	2	02098200	Adapter Tube Sleeve 1 1/4"
16	6	00615500	Adapter Straight 7/8" JICM/ 7/8" JICM
17	6	00618900	Adapter 90° 7/8" JICM/ 7/8" JICM
18	6	00619700	Adapter 90° 1 5/16"JICM/ 1 1/16"JICM
19	2	00540500	Adapter 90° 1 5/8" JICM/ 1 5/16" JICM
20	2	00614800	Adapter Tee 7/8" JICM
21	6	00723700	Hose Clamp 7/8"
22	4	00722900	Hose Clamp 3/4"
23	6	02196400	U-bolt 3/8"-16 x 1 x 2
24	2	01034800	U-bolt 3/8"-16 x1 1/4 x2 1/4
26	2	00613000	Hose Clamp 5/8"
27	38	02093300	Grommet 3/4"ID x 1 5/8" OD
28	15	02094100	Grommet 1" ID x 1 3/4" OD
29	5	02095800	Grommet 1 5/16" ID x 2" OD
30	2	02866200	Adapter Straight 7/8" JICM / 3/4" JICM
31		***(Intermediate)***	
	1	20516100	Hose Clamp Bracket
		(Stripper)	
	1	20517900	Hose Clamp Bracket
32	3	338111	U-Bolt 3/8" x 1½"
33	1	333906	U-Bolt 3/8" x 1 3/4"

Hydraulic Hoses

(Intermediate)			
A	1	00494500	Hyd Hose 1" x 240" w/1 5/16" JICF Swivel
B	1	00495200	Hyd Hose 3/4" x 240 " w/1 1/16" JICF Swivel
(Stripper)			
A	1	01063700	Hyd Hose 1" x 260" w/1 5/16" JICF Swivel
B	1	01064500	Hyd Hose 3/4" x 260 " w/1 1/16" JICF Swivel
		03627700	Hose Sleeve for 3/4" hose
		03628500	Hose Sleeve for 1" hose

Tube Fitting Assembly

1. Clean all dirt and grit from the I.D. and O.D.
2. Slide the nut and then the ferrule onto the tube. Make sure the tapered end of ferrule points toward the nut.

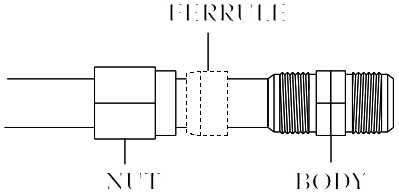

3. Lubricate all mating surfaces of nut, ferrule and body with a heavy lubricant such as Aeroquip Lube Oil.
4. Place end of tube against standard S.A.E. 37° flare body.
5. Slide the ferrule and nut against body and tighten the nut onto the body "hand tight." Mark the nut in relation to the body for location.

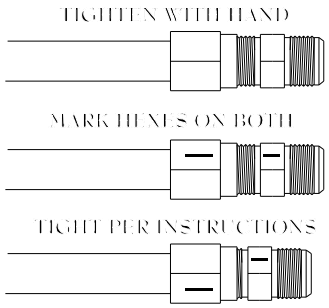

6. Hold tube against body and tighten nut as follows:
   a. 1 1/4 turns on -3 (3/16") through -10 (5/8").
   b. 1 1/2 turns on -12 (3/4") through -32 (2").

Single Axle Assembly

Item	Qty	Part No.	Description
	2	60722600	Single Axle Assembly w/hub only
1	2	80029200	Single Axle
2	2	02710200	Complete Hub
3	16	03659000	Lug Bolt
4	2	02726800	Inner Cup
5	2	400846	Outer Cup
6	2	02728400	Inner Cone
7	2	400853	Outer Cone

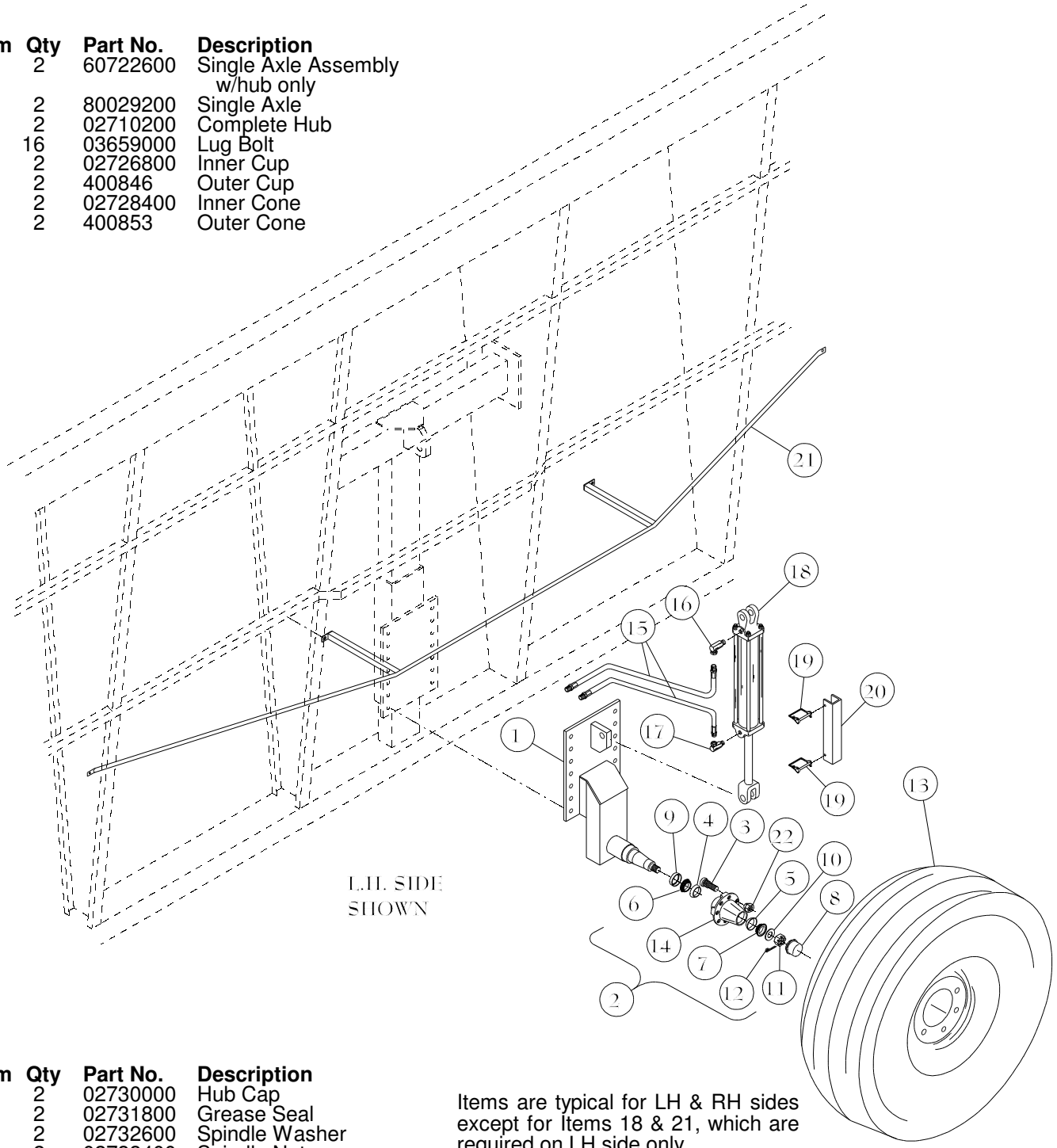

Item	Qty	Part No.	Description
8	2	02730000	Hub Cap
9	2	02731800	Grease Seal
10	2	02732600	Spindle Washer
11	2	02733400	Spindle Nut
12	2	02734200	Cotter Pin
13	2	60975000	Tire & Rim Assembly
14	2	02791200	Hub w/cups only
15	4	468488	Hyd Hose 3/8" x 26"
16	2	466862	Adapter 90° w/Restrictor 3/4" MOR/ 3/4" JICM
17	2	465310	Adapter 90° 3/4" MOR/ 3/4" JICM
18	2	02706000	Cylinder- ***(Stripper)*** 3 x 12 w/1½" rod
	2	00492900	Cylinder - ***(Intermediate)*** 3 x 16 w/1½" rod
	A/R	461087	Cylinder Seal Kit

Items are typical for LH & RH sides except for Items 18 & 21, which are required on LH side only.

Item	Qty	Part No.	Description
19	4	00233700	Pin 5/16" Wire Lock
20	2	12104600	Transport Lockout for 3x12 Cylinder
	2	10745800	Transport Lockout for 3 x 16 Cylinder
21	1	82397100	Hose Rail-LH side
22	16	03660800	Lug Nut

Cylinder Tower and Tamper

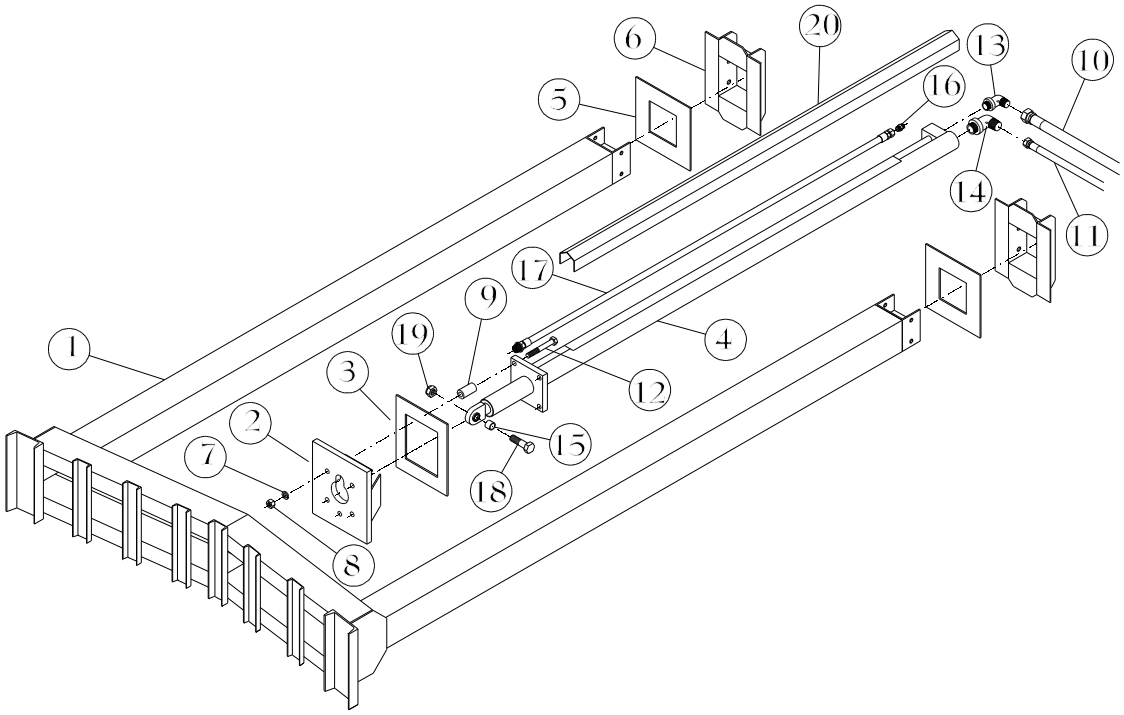

Item	Qty	Part No.	Description
1	1	80106800	Tamper
2	1	82414400	Cylinder Lock Plate
3	1	18394700	Tamper Cushion
4	1	03565900	Cylinder 2½" x 89"
5	2	10785400	Tower Pads
6	2	80146400	Tower Stop
7	4	330332	Washer 3/4" Lock
8	4	330290	Nut 3/4" Hex
9	4	18356600	Spacer
10	1	00545400	Hyd Hose 3/4"x 140"
11	1	00548800	Hyd Hose 1" x 140"
12	4	334466	HHCS 3/4" x 6"
13	1	00607200	Adapter 90D 1 1/16 MOR/1 1/16 JICM
14	1	00634600	Adapter 90D 1 5/16 MOR/1 5/16 JICM
15	1	600213	Bushing 1" x 1 1/4" x 1"
16	1	00590000	Adapter Straight 1 1/16 MOR / 1 1/16 JICM
17	1	62706700	Hyd Hose 3/4" x 99½"
18	1	334789	HHCS 1" x 3½"
19	1	330597	Nylock Nut 1"
20	1	20371100	Cover

Gate Assembly

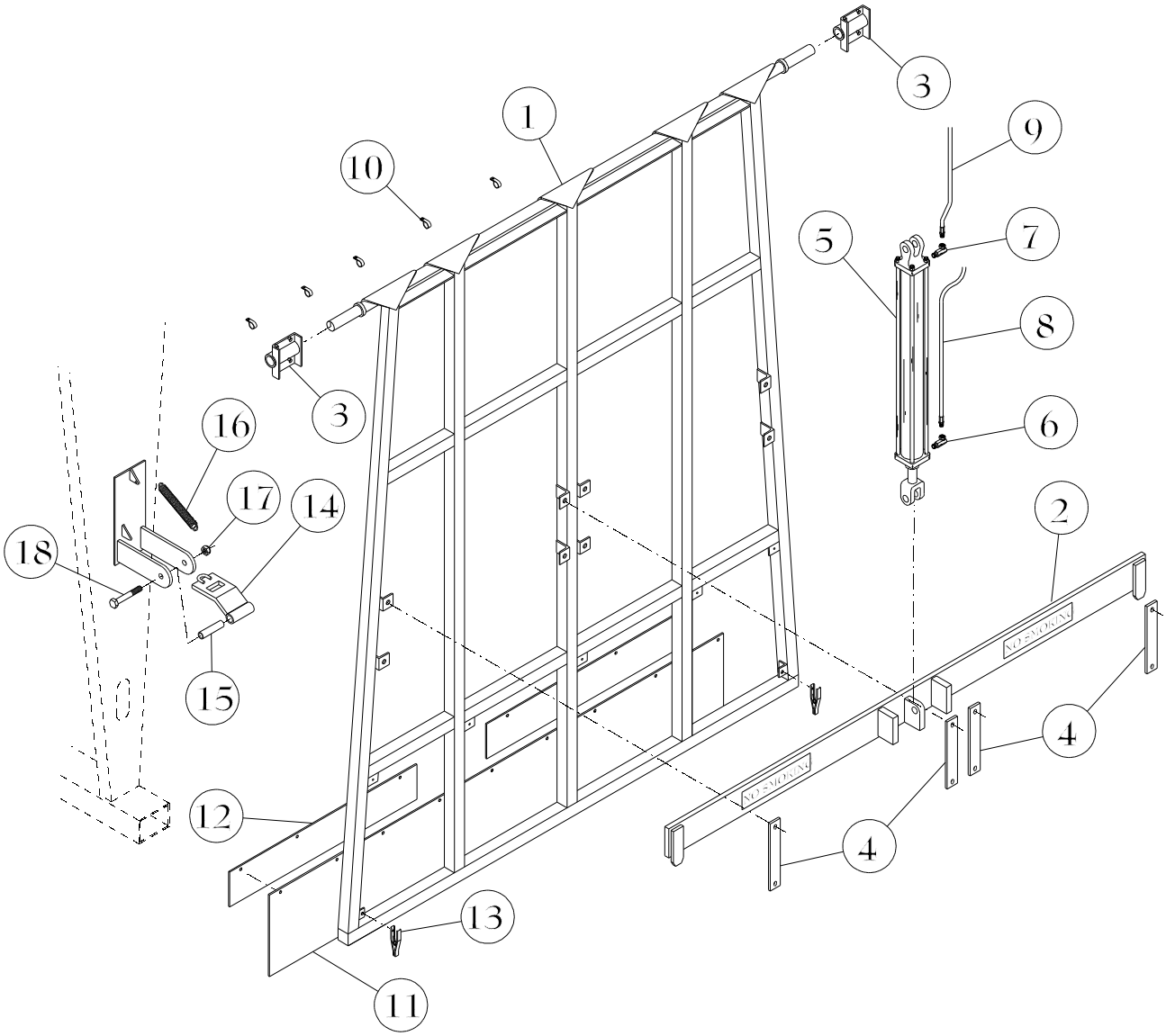

Item	Qty	Part No.	Description
1	1	80974900	Tail Gate ***(Intermediate)***
	1	80975600	Tail Gate ***(Stripper)***
2	1	82567900	Gate Latch Bar ***(Intermediate)***
	1	82560400	Gate Latch Bar ***(Stripper)***
3	2	80115900	Gate Hinge
4	4	12792800	Gate Latch Retainer Strap
5	1	02858900	Cylinder 3 x 30 1 1/4" ram
6	1	466862	Adapter 90° w/restrictor 3/4" MOR / 3/4" JICM
7	1	465310	Adapter 90° 3/4" MOR/ 3/4" JICM
8	1	469478	Hyd Hose 3/8" x 162" ***(Intermediate)***
	1	469486	Hyd Hose 3/8" x 210" ***(Stripper)***
9	1	469460	Hyd Hose 3/8" x 144" ***(Intermediate)***
	1	469478	Hyd Hose 3/8" x 162" ***(Stripper)***
10	5	00613000	Clamp Hose 5/8"
11	1	14222400	Gate Seal ***Intermediate***
	1	12794400	Gate Seal ***Stripper***
12			Gate Seal Back-up
	2	14223200	***(Intermediate)***
	2	12793600	***(Stripper)***
13	5	03445400	Tarp Clamp
14	2	82559600	Latch Pin
15	2	20663100	Bushing
16	2	00687400	Spring
17	2	330316	Nylock 3/4"
18	2	01299700	HHCS 3/4" x 5"

Cylinders

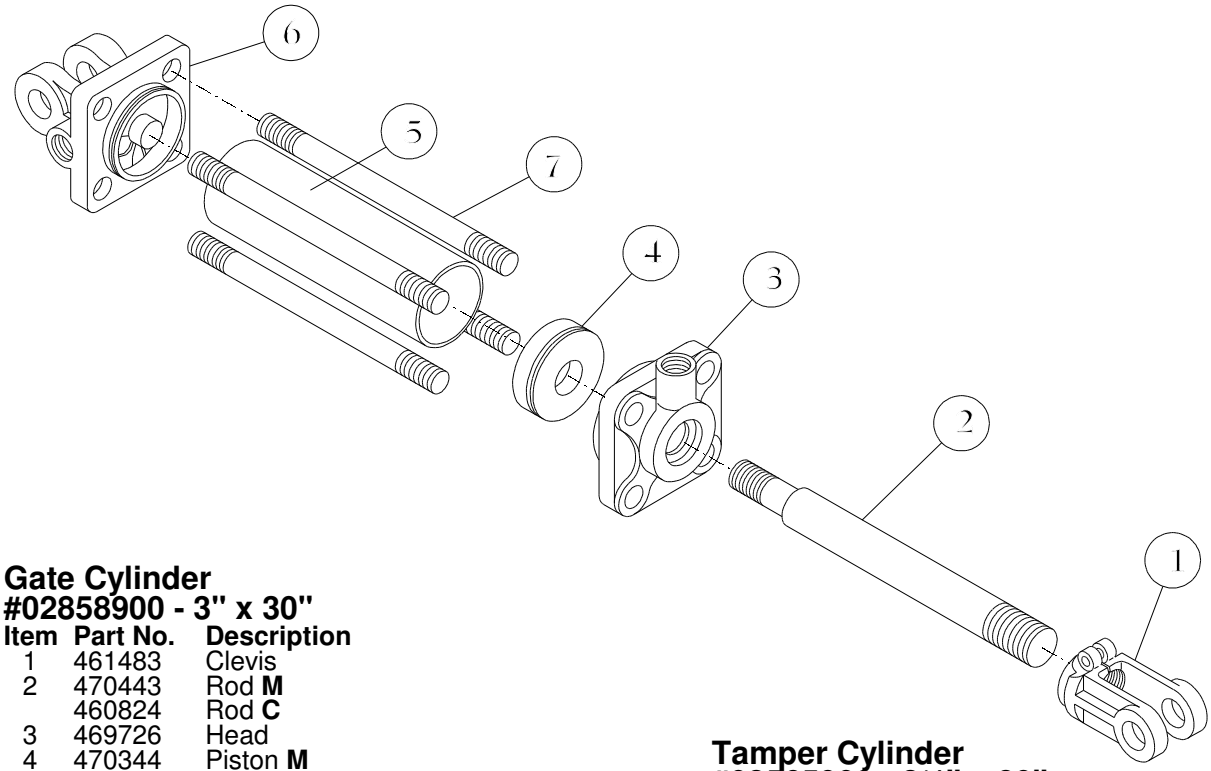

Gate Cylinder
#02858900 - 3" x 30"

Item	Part No.	Description
1	461483	Clevis
2	470443	Rod **M**
	460824	Rod **C**
3	469726	Head
4	470344	Piston **M**
	460964	Piston **C**
5	461004	Tube
6	469718	Base
7	461053	Tie Rod
	461079	Seal Kit

Tamper Cylinder
#03565900 - 2½" x 89"

Part No.	Description
03647500	Head
03623600	Seal Kit

Wheel Cylinder - *(Stripper Models)*
#02706000 - 3" x 12"

Item	Part No.	Description
1	461483	Clevis
2	469114	Rod **M**
3	460899	Head
4	470344	Piston **M**
	460964	Piston **C**
5	469130	Tube
6	469718	Base
7	469155	Tie Rod
	461087	Seal Kit

Wheel Cylinder - *(Intermediate Models)*
#00492900 - 3" x 16"

Item	Part No.	Description
1	461483	Clevis
2	469122	Rod **M**
3	460899	Head
4		Piston
5	469148	Tube
6	469718	Base
7	469163	Tie Rod
	461087	Seal Kit

Lights

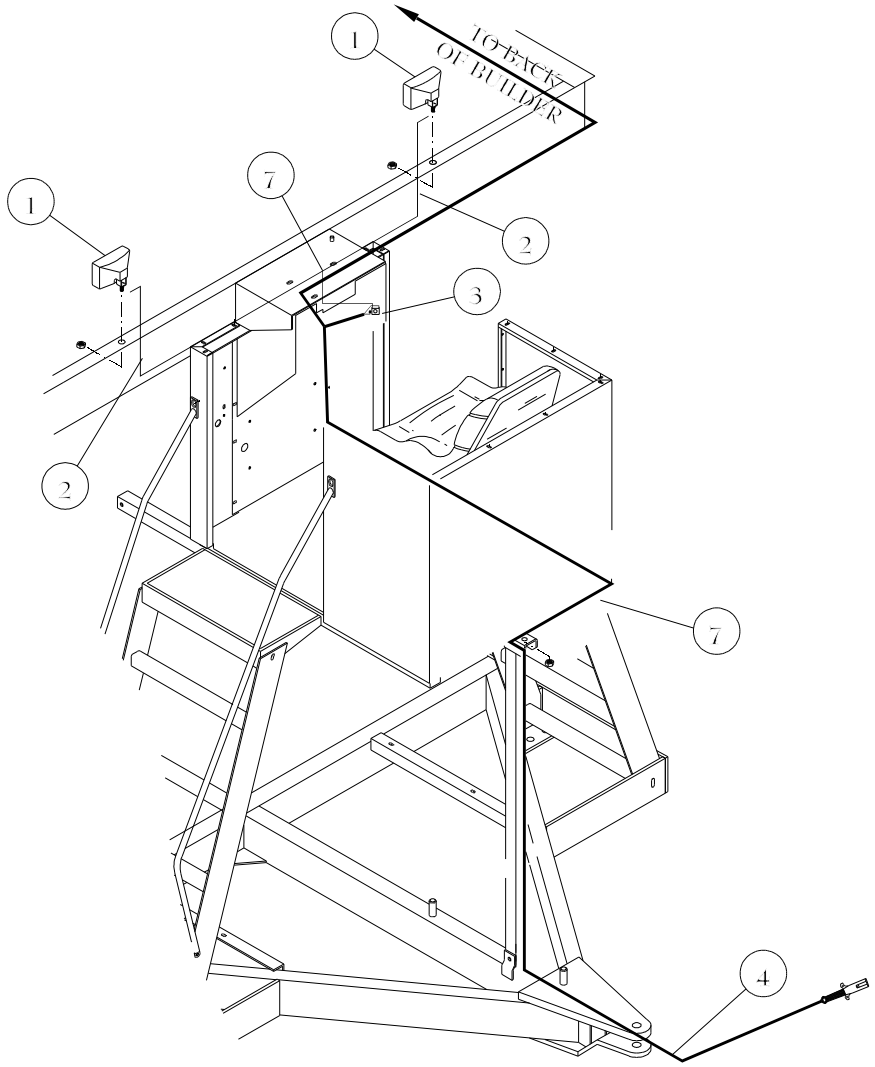

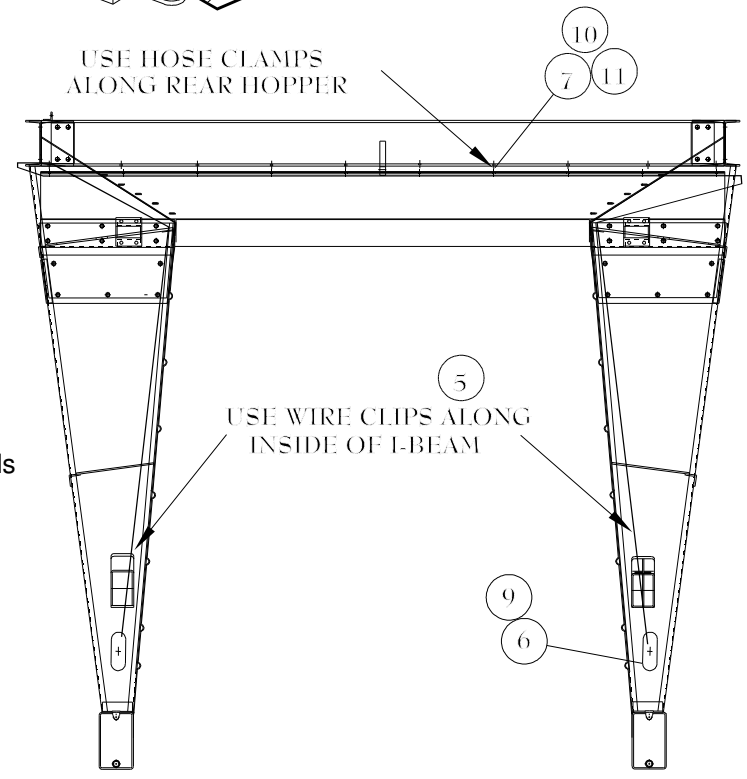

Item	Qty	Part No.	Description
1	2	03450400	Light
2	2	62608500	Wire 14 ga x 69"
3	1	03449600	Light Switch On-Off
4	1	03446200	Wiring Harness
5	16	03452000	Wire Clips
6	2	605535	Tail Lights / Turn Signals
7	6	00613000	Hose Clamp
8	6	570192	Cable Tie
9	2	605709	Light Grommet
10	5	330654	Carriage Bolt 3/8" x 1"
11	5	330837	Nylock Nut 3/8"

CrustBuster SPEED KING INC.

P. O. Box 1438 Dodge City, Kansas 67801 (620) 227-7106